DATE: 4/25/2016

BID NO.: 50-00116421

INVITATION TO BID
THIS IS NOT AN ORDER

JEFFERSON PARISH

PURCHASING DEPARTMENT
P.O. BOX 9
GRETNA, LA. 70054-0009
504-364-2678

VENDOR:

BUYER: LFRANCIS

As per LSA-RS 47:301 et seq., all governmental bodies are excluded from payment of sales taxes to any Louisiana taxing body. Quotations shall be based on F.O.B. Agency warehouse or jobsite, anywhere within the Parish as designated by the Purchasing Department.

JEFFERSON PARISH reserves the right to cancel all or any part of an order if not shipped promptly. No charges will be allowed for parking or cartage unless specified in quotation. The order must not be filled at a higher price than quoted. JEFFERSON PARISH reserves the right to cancel at any time and for any reason by issuing a THIRTY (30) day written notice to the contractor.

JEFFERSON PARISH is expecting all products to be new and all work is to be done in a workman-like manner, according to standard practices. Any deviations or alterations from the specifications must be indicated and backup documentation supplied with your quotation.

DELIVERY: FOB JEFFERSON PARISH

INDICATE DELIVERY DATE ON EQUIPMENT AND SUPPLIES 5-7 DAYS ARO

INDICATE STARTING TIME (IN DAYS) FOR CONSTRUCTION WORK

INDICATE COMPLETION TIME (IN DAYS) FOR CONSTRUCTION WORK

In the event that addenda are issued with this bid, bidders MUST acknowledge all addenda on the bid form. Bidder must acknowledge receipt of an addendum on the bid form as indicated. Failure to acknowledge any addendum on the bid form will result in bid rejection.

Acknowledge Receipt of Addenda: NUMBER:

NUMBER:

NUMBER:

NUMBER:

LOUISIANA CONTRACTOR'S LICENSE NO.: (if applicable)

***** ALL BIDDERS MUST COMPLETE SECTION BELOW *****

FIRM NAME: CORR TECH, INC.

SIGNATURE: (Must be signed here) TITLE: INSIDE SALES

PRINT OR TYPE NAME: Todd M. Fairchild

ADDRESS: 1124 W. DUCE ROSE ST

CITY, STATE: GONZALES, LA ZIP: 70737

TELEPHONE: (225) 644-7595 FAX: (225) 647-3112

EMAIL ADDRESS:

TOTAL PRICE OF ALL BID ITEMS: $ 158.88

DATE: 4/25/2016

INVITATION TO BID FROM JEFFERSON PARISH - continued

BID NO.: 50-00116421

SEALED BID

ITEM NUMBER	QUANTITY	U/M	DESCRIPTION OF ARTICLES	UNIT PRICE QUOTED	TOTALS
			QUANTITY FOR SUPPLY OF VALVES: PLASTIC BALL FOR JEFFERSON PARISH DEPARTMENT OF PUBLIC WORKS - WATER DIVISION		
1	4.00	EA	0010 DeNora BM-346 Secondary check valve (vacuum) 1" unions Purpose: this is to replace the ball check we have in the chlorine room. Ship To: Westbank Water Plant 4500 Westbank Expressway Marrero LA 70072 Attn: Darren Hernandez DENORA EQUIVELENT ASAHI 1210010 BALL CHECK VALVE 1" TRUE UNION	39.72	158.88

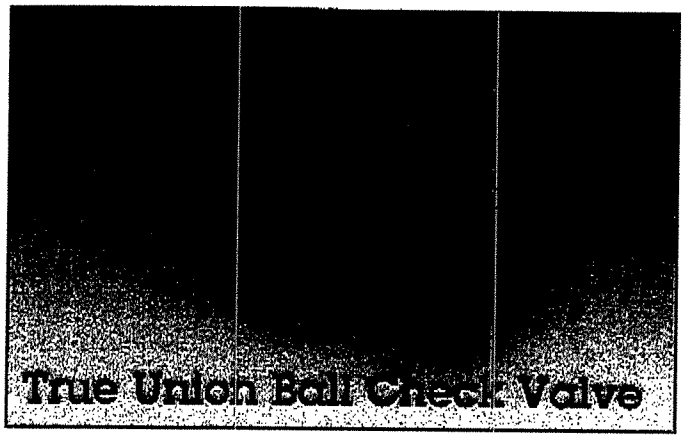

Specifications

Sizes:	True Union : 1 /2" – 2"
	Single Union: 3" – 4"
Models:	Socket, Threaded, Flanged (ANSI), Butt End
Bodies:	PVC, CPVC, PP and PVDF
Seats:	EPDM, FKM, PTFE
Seals:	EPDM, FKM, PTFE
Option:	Foot Valve

Sizes 1/2" - 4" PVC/EPDM/FKM Models
NSF-61 Certified

Standard Features (Sizes 1/2" - 2")

- Uniseat/seal of EPDM or FKM
- Ball is the only moving part. It unseats to permit flow in one direction but seals against seat to prevent back flow
- May be used vertically or horizontally
- Minimum shut-off of 5psi
- All sizes rated for full vacuum service
- Solid thermoplastic ball

Options:

- PTFE coated FKM uniseat/seal
- Spring-loaded ball to assist ball in seating faster

Parts List – True Union (Sizes 1/2" - 2")

PARTS			
NO.	DESCRIPTION	PCS.	MATERIAL
1	Body	1	PVC, CPVC, PP, PVDF
2	Ball	1	PVC, CPVC, PP, PVDF
3	End Connector	2	PVC, CPVC, PP, PVDF
4	Union Nut	2	PVC, CPVC, PP, PVDF
5	Stop Ring (A)	1	PVC, CPVC, PP, PVDF
8	Stop Ring (B)*	1	PVDF
9	Seat	1	EPDM, FKM, PTFE
10	O-Ring	1	EPDM, FKM, PTFE
3a	Ring**	1	Stainless Steel 304

* Used for flanged end.
** Used for CPVC body, threaded end; 1/2" - 1".

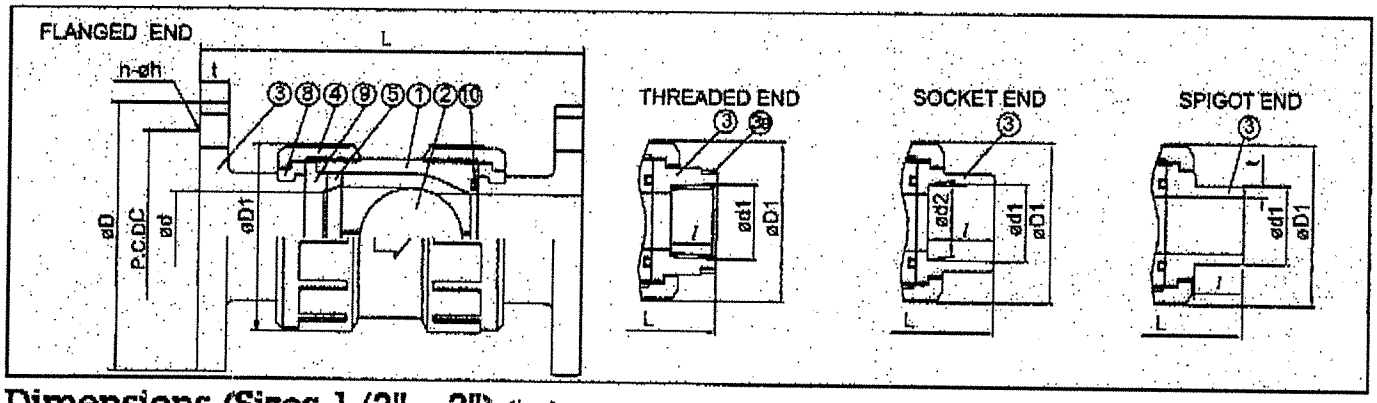

Dimensions (Sizes 1/2" – 2") (in.)

NOMINAL SIZE		FLANGED						THREADED					SOCKET												SPIGOT (BUTT END)				
		ANSI CLASS 150											PVC, CPVC				PP, PVDF (DIN)				PP, PVDF (IPS)				PP, PVDF				
													PP, PVDF				DIN 16962								DIN 3442		PP	PVDF	
INCHES	mm	D	C	n	h	L	t	d1	l	L	d	D1	d1	d2	l	L	d1	d2	l	L	d1	l	L		d1	l	t	t	L
1/2	15	3.50	2.38	4	0.62	5.12	0.47	1/2 - 14NPT	0.59	3.38	0.59	1.89	0.848	0.836	0.898	3.43	0.768	0.760	0.57	3.19	0.83	0.87	3.31		0.787	0.728	0.098	0.075	4.00
3/4	20	3.88	2.75	4	0.62	6.10	0.55	3/4 - 14NPT	0.67	4.06	0.79	2.36	1.056	1.046	0.719	3.86	0.965	0.957	0.63	3.70	1.03	1.00	4.43		0.984	0.866	0.106	0.075	4.35
1	25	4.25	3.12	4	0.62	6.50	0.55	1 - 11-1/2NPT	0.79	4.45	0.98	2.78	1.325	1.310	0.875	4.37	1.240	1.232	0.71	4.13	1.30	1.13	4.35		1.260	0.866	0.118	0.094	4.75
1-1/4	32	-	-	-	-	-	-	1-1/4 - 11-1/2NPT	0.87	5.00	1.22	3.78	1.670	1.655	0.938	4.92	-	-	-	-	-	-	-		-	-	-	-	-
1-1/2	40	5.00	3.88	4	0.62	7.56	0.63	1-1/2 - 11-1/2NPT	0.98	5.94	1.57	3.78	1.912	1.894	1.094	5.94	1.947	1.937	0.93	5.62	1.89	1.37	5.57		1.969	1.260	0.181	0.118	5.75
2	50	6.00	4.75	4	0.75	8.43	0.63	2 - 11-1/2NPT	1.10	6.97	2.01	4.17	2.387	2.369	1.156	6.77	2.461	2.445	1.08	6.59	2.36	1.50	6.49		2.480	1.417	0.228	0.118	6.50

Ball Check Single Union

Single Union Ball Check Valves

Parts List – Single Union (Sizes 3" – 4")

PARTS			
NO.	DESCRIPTION	PCS.	MATERIAL
1	Body	1	PVC, CPVC, PP, PVDF
2	Ball	1	PVC, CPVC, PP, PVDF
3	End Connector	1	PVC, CPVC, PP, PVDF
4	Union Nut	1	PVC, CPVC, PP, PVDF
5	Stop Ring (A)	1	PVC, CPVC, PP, PVDF
8	Flange	1	PVC, CPVC, PVDF
9	Stub	1	PVC, CPVC, PVDF
10	Stop Ring (B)*	1	PVDF
3a	Seat	1	EPDM, FKM, PTFE

* Used for flanged end

Dimensions (Sizes 3" – 4") (in.)

NOMINAL SIZE				FLANGED							SOCKET											THREADED			SPIGOT (BUTT END)				
				ANSI CLASS 150							PVC, CPVC				PP, PVDF (DIN)				PP, PVDF (IPS)						PP, PVDF				
											ASTM SCH40				DIN 16962										DIN 3442	PP	PVDF		
INCHES	mm	d	D1	n	C	n	h	l	t1	t2	d1	d2	l	L	d1	d2	l	L	d1	l	L	d1	l	L	d1	L	t	t	L
3	80	3.07	5.88	7.50	6.00	4	0.75	12.2	0.71	0.87	3.516	3.492	1.875	9.57	3.51	3.50	1.40	8.46	3.480	1.874	9.55	4-8 NPT	1.38	8.74	3.54	1.49	0.32	0.17	11.67
4	100	3.94	8.27	9.00	7.50	8	0.75	15.63	0.71	0.87	4.516	4.491	2.000	12.20	4.29	4.28	1.63	11.46	4.480	2.252	12.80	0-8 NPT	1.77	12.09	4.33	1.75	0.39	0.21	13.93

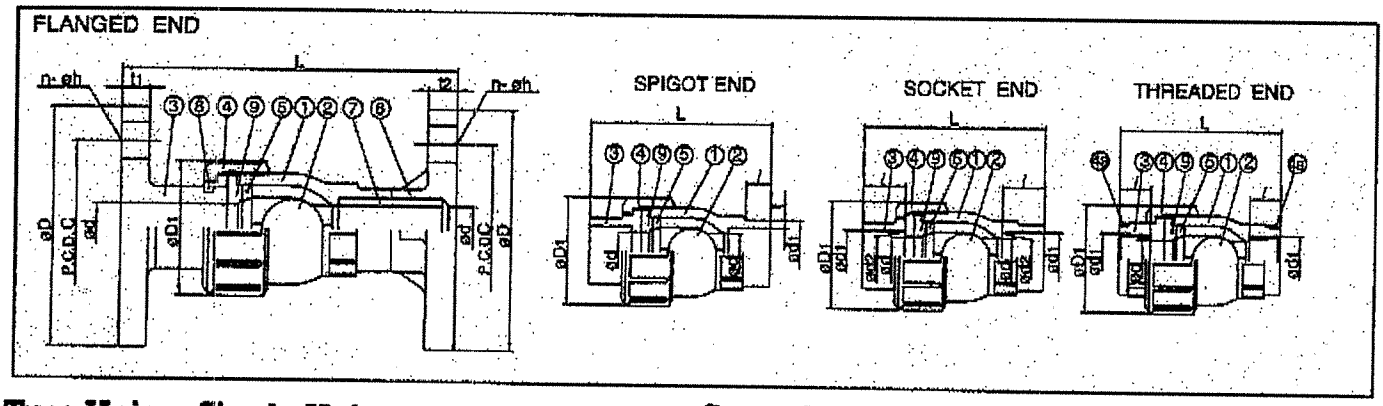

True Union, Single Union, and Foot Valve Weight (lbs.)

NOMINAL SIZE		SOCKET	FLANGED
INCHES	mm		
1/2	15	0.22	0.66
3/4	20	0.44	1.10
1	25	0.66	1.54
1-1/2	40	1.54	2.20
2	50	2.20	3.31
3	80	6.17	9.92
4	100	14.99	24.25

Cv Values

NOMINAL SIZE		Cv
INCHES	mm	
1/2	15	6.5
3/4	20	17
1	25	25
1-1/2	40	86
2	50	130
3	80	280
4	100	500

Sample Specification

All ball check valves and foot valves shall be of solid thermoplastic construction, and shall be designed with an elastomeric uniseat/seal for tight shut-off under pressure. Sizes 1/2" through 2" shall be of true union design, while 3" & 4" shall be single union design. The same seal shall function as both the ball seat and the union seal. PVC shall conform to ASTM D1784 Cell Classification 12454A, CPVC shall conform to ASTM D1784 Cell Classification 23567A, PP shall conform to ASTM D4101 Cell Classification PP0210B67272 and PVDF shall conform to ASTM D3222 Cell Classification Type II. Ball check valves and foot valves sizes 1/2"- 2" shall be rated 150psi at 70° F, 3" and 4" rated 100psi at 70° F, as manufactured by Asahi/America, Inc.

Ball Check Foot Valve Option

Parts List Foot Valve (Sizes 1/2" – 2")

PARTS			
NO.	DESCRIPTION	PCS.	MATERIAL
1	Body	1	PVC, CPVC, PP, PVDF
2	Ball	1	PVC, CPVC, PP, PVDF
3	End Connector	1	PVC, CPVC, PP, PVDF
4	Union Nut	2	PVC, CPVC, PP, PVDF
5	Stop Ring (A)	1	PVC, CPVC, PP, PVDF
7	Flange	1	EPDM, FKM, PTFE
8	Screen	1	PVC, CPVC, PP, PVDF
9	Seat	1	EPDM, FKM, PTFE
10	O-Ring	2	EPDM, FKM, PTFE
11	Stop Ring (B)*	1	PVDF
4a	Ring	1	304SS

Parts List Foot Valve (Sizes 3" – 4")

PARTS			
NO.	DESCRIPTION	PCS.	MATERIAL
1	Body	1	PVC, CPVC, PP, PVDF
2	Ball	1	PVC, CPVC, PP, PVDF
3	End Connector	1	PVC, CPVC, PP, PVDF
4	Union Nut	2	PVC, CPVC, PP, PVDF
5	Stop Ring (A)	1	PVC, CPVC, PP, PVDF
6	Stub (2)	1	PVC, CPVC, PP, PVDF
7	Flange	1	PVC, CPVC, PP, PVDF
8	Screen	1	PVC, CPVC, PP, PVDF
9	Seat	1	EPDM, FKM, PTFE
4a	Ring	1	304SS

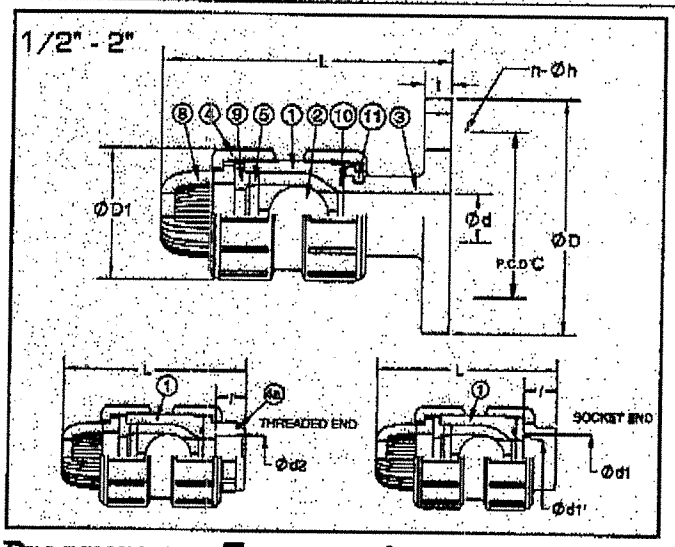

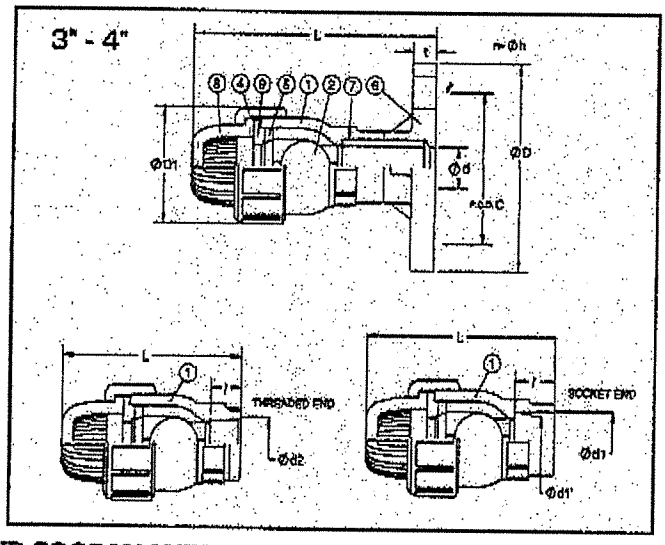

Pressure vs. Temperature -BALL CHECK AND FOOT VALVES (psi, water, non-shock)

NOMINAL SIZE		PVC	CPVC				PP			PVDF			
INCHES	mm	30° F 120° F	30° F 120° F	121° F 140° F	141° F 175° F	176° F 195° F	- 5° F 85° F	86° F 140° F	141° F 175° F	- 30° F 140° F	141° F 175° F	176° F 195° F	196° F 210° F
1/2 - 2	15-50	150	150	120	90	60	150	90	60	150	125	110	90
3 - 4	80-100	100	100	90	60	45	75	60	45	100	90	60	45

Dimensions (1/2"– 4") (in.)

NOMINAL SIZE			SOC.	THR'D		FLG.	
				PVC CPVC	PVDF PP	PVC CPVC	PVDF PP
INCHES	mm	D1	L	L	L	L	L
1/2	15	1.89	3.74	3.74	3.62	4.61	4.53
3/4	20	2.36	4.25	4.33	4.21	5.39	5.31
1	25	2.78	4.80	4.84	4.72	5.87	5.79
1-1/2	40	3.78	7.17	7.17	7.05	7.99	7.91
2	50	4.17	7.72	7.83	7.72	8.58	8.50
3	80	5.98	12.09	11.57	11.34	16.1	13.23
4	100	8.27	14.96	14.72	14.41	20.41	16.34

Foot Valve Wt. (lbs.)

NOMINAL SIZE		SOCKET	FLANGED
INCHES	mm		
1/2	15	0.22	0.66
3/4	20	0.44	0.88
1	25	0.66	1.32
1-1/2	40	1.54	3.31
2	50	2.20	3.31
3	80	7.71	11.02
4	100	15.43	23.14

Caution

- Never remove valve from pipeline under pressure.
- Always wear protective gloves and goggles.

Ball Check Valves

1.0 Scope:
All requirements are for PVC, CPVC, Polypropylene & PVDF True-Union and Single Union Ball Check Valves and accessories.

2.0 Materials:
U-PVC – Conforming to ASTM D1784 Cell Classification 12454 A
CPVC – Conforming to ASTM D1784 Cell Classification 23567A
Polypropylene – Conforming to ASTM D4101 Cell Classification PP0210B67272
PVDF – Conforming to ASTM D3222-91A Cell Classification Type II
FKM – Viton® Fluorocarbon Rubber
EPDM – Ethylene Propylene Diene Terpolymer Rubber
PTFE – Teflon® Polytetrafluoroethylene

3.0 Valves:
Ball Check valves shall be PVC, CPVC, PP or PVDF body with EPDM, FKM or PTFE seals. Valves shall be of solid thermoplastic construction, and be designed with an elastomeric uniseat/seal for tight shut-off under pressure. Sizes 1/2" – 2" shall be true union, and sizes 3" & 4" shall be single union.

3.1 Approved Manufacturer
Valves shall be provided by Asahi/America, Inc. of Lawrence, MA with no approved equals. Manufacturer must be ISO-9001 certified.

3.2 Pressure Vs. Temperature
Valves shall have a pressure rating of:

150 psi at 70° F sizes 1/2" – 2"
100 psi at 70° F sizes 3" & 4"

4.0 Accessories:
4.1 SS Spring
Valves shall be capable of being machined to accept a 316 SS Spring or PTFE Coated 316 SS spring where required. A minimum 10 psi inlet pressure is required to "crack" open the valve with this option.

4.2 Foot Valve Screen
Valves shall accept the option of a PVC Foot valve screen on the inlet side of the valve for use in applications where the valve is in a tank on the suction side of the pump to protect against foreign material entering the system.

5.0 Certifications:
5.1 NSF-61
PVC/EPDM and PVC/FKM models shall have NSF-61 Certification for use in drinking water applications.

6.0 Installation Procedures:
All valve joints shall be prepared using the preferred joining method for the valve material and installation type in accordance with all requirements put forth in the Ball Check Valve Operation & Maintenance manual. All accessories should be installed in accordance with the manufacturer's requirements as well as any facility requirements.

FLANGED END

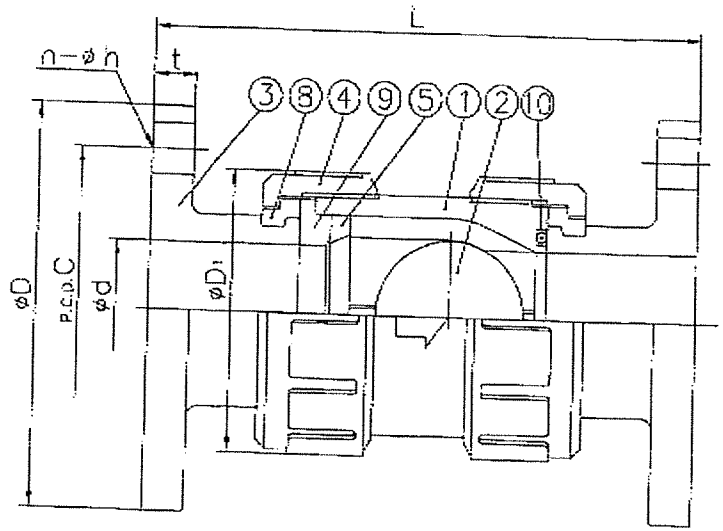

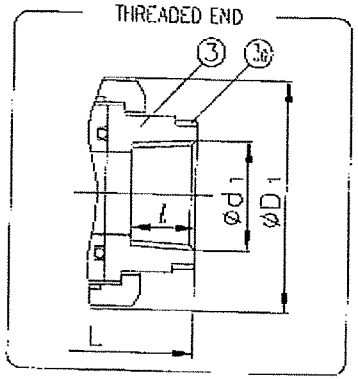

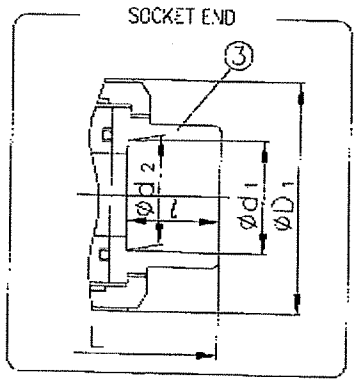

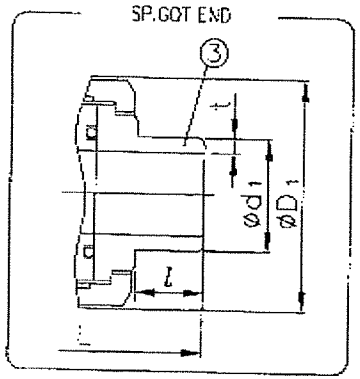

FOR REFERENCE ONLY
ASAHI/AMERICA

DIMENSIONS TABLE

UNIT : inch

NOMINAL SIZE		FLANGE ANSI Class150 D	C	n	h	L	t	THREAD d_1	l	L	d	D_1
½"	15	3.50	2.38	4	0.62	5.12	0.47	½−14 NPT	0.59	3.39	0.59	1.89
¾	20	3.88	2.75	4	0.62	6.10	0.55	¾−14 NPT	0.67	4.06	0.79	2.36
1	25	4.25	3.12	4	0.62	6.50	0.55	1−11½NPT	0.79	4.45	0.98	2.76
1¼	30	—	—	—	—	—	—	1¼−11½NPT	0.87	5.00	1.22	3.78
1½	40	5.00	3.88	4	0.62	7.56	0.63	1½−11½NPT	0.98	5.94	1.57	3.78
2	50	6.00	4.75	4	0.75	8.43	0.63	2−11½NPT	1.10	6.97	2.01	4.17

DIMENSIONS TABLE

UNIT : inch

NOMINAL SIZE		SOCKET PVC, CPVC ASTM SCH40 d_1	d_2	l	L	PP, PVDF (DIN) DIN 16962 d_1	d_2	l	L	PP, PVDF (IPS) d_1	l	L	SPIGOT (BUTT END) PP, PVDF DIN 3442 d_1	l	PP t	PVDF t	L
½"	15	0.848	0.836	0.688	3.43	0.768	0.760	0.57	3.19	0.83	0.87	3.37	0.787	0.728	0.098	0.075	4.00
¾	20	1.058	1.046	0.719	3.86	0.965	0.957	0.63	3.70	1.03	1.00	4.43	0.984	0.865	0.106	0.075	4.35
1	25	1.325	1.310	0.875	4.37	1.240	1.232	0.71	4.13	1.30	1.13	4.35	1.260	0.886	0.118	0.094	4.75
1¼	30	1.670	1.655	0.938	4.92	—	—	—	—	—	—	—	—	—	—	—	—
1½	40	1.912	1.894	1.094	5.94	1.947	1.937	0.93	5.62	1.89	1.37	5.57	1.969	1.260	0.181	0.118	5.75
2	50	2.387	2.369	1.156	6.77	2.461	2.445	1.08	6.69	2.36	1.50	6.49	2.480	1.417	0.228	0.118	6.50

NOTE. The shape and appearance of assembly differ a little with nominal size compared to this drawing.

No.	DESCRIPTION	No.REQ'D	MATERIAL	REMARKS
3a	RING[1]	2	STAINLESS STEEL 304	1) CPVC Body, Threaded End : Used for 1/2" ~ 1"
10	O−RING	1	☐EPDM	2) Used for Flanged End
9	SEAT	1	☐FKM ☐Others ( )	
8	STOP RING(B)[2]	1	PVDF	
5	STOP RING(A)	1	☐PVC	
4	UNION NUT	1	☐CPVC	
3	END CONNECTOR	1	☐PP	
2	BALL	1	☐PVDF	
1	BODY	1		

THIS DRAWING AND ALL INFORMATION HEREON IS THE PROPERTY OF ASAHI/AMERICA. ANY COPYING, REPRODUCTION OR UNAUTHORIZED USE IS FORBIDDEN WITHOUT WRITTEN CONSENT.

	NAME	DATE
DR	KENICHI MIYAZAKI	8/28/02
APPD	DAVE HURLEY	8/28/02
PROD	LEO LESTER	8/28/02
WO#/CO#		
FILE		

ASAHI/AMERICA
ISO 9001 CERTIFIED
35 GREEN STREET, P.O. BOX 653, MALDEN, MA.

BALL CHECK VALVE
DOUBLE TRUE UNION
1/2" THRU 2"

SIZE A | DWG. NO. 0015CH | REV E

SCALE NTS | SHEET 1 OF 1