Symbols Used in This Manual

DANGER

Failure to follow these instructions identified by this symbol could result in death or serious injury to you and/or other people.

WARNING

Failure to follow these instructions identified by this symbol could result in death or severe injury/engine fire.

CAUTION

Failure to follow these instructions identified by this symbol could result in injuries or an accident.

ADVICE

Failure to follow these instructions identified by this symbol could result in engine failure/damage.

NOTE

This symbol identifies information that you need to know.

This symbol also identifies information that would be useful for operating the engine.

IDE-6570A_4600601_ALL.indd 2 2015/04/21 11:56:33

HOW TO USE THIS MANUAL AND HOW TO FIND A SPECIFIC TOPIC

0

- HOW TO USE THIS MANUAL 0-2
- HOW TO FIND A SPECIFIC TOPIC 0-3
- CHAPTER DESCRIPTION 0-5
- PICTORIAL INDEX 0-6

Chapter/section titles

These titles are useful for getting the gist of the content at a glance.

Chapter index tab

Use this for quick access to your desired chapter.

IMPORTANT INFORMATION 2-3

Fuel, Lubricant and Coolant

Use the Specified Fuel

CAUTION

- Using fuel other than extra-low-sulfur diesel fuel (with a sulfur content of 10 ppm or lower for Japan and Europe, 15 ppm or lower for the United States and Canada) may have a harmful effect on the engine, possibly resulting in a breakdown. If a wrong type of fuel is filled in, drain it completely. It is dangerous to start the engine with the wrong type of fuel filled in because doing so may cause a fire or engine damage.
- Any failure which arises from use of fuel other than extra-low-sulfur diesel fuel is excluded from the coverage of warranty.
- Open the fuel cap slowly. If the cap is opened quickly, the fuel may spurt out.

ADVICE

- For fuel of diesel engine, the following characteristics are required.
  Use a type of extra-low-sulfur diesel fuel designated for general diesel vehicles that is compliant with the following standards: Japanese Industrial Standards (JIS) K2204, American Society for Testing and Materials (ASTM) D975 No. 1-D S15 and No. 2-D S15, British Standards (BS) EN590, Deutsche Industrie Normen (DIN) EN590, Canada General Standards Board (CGSB) CGSB-3.517
  - No fine dust is contained.
  - Appropriate degree of viscosity is provided.
  - High in cetane value.
  - Good low-temperature fluidity.
  - Low sulfur content.
  - Low carbon residue.
- Be sure to use extra-low-sulfur diesel fuel. Adding of or mixing with inferior fuel, water remover, other fuel additives, gasoline, heating oil, heavy oil or alcoholic fuel for use may cause a sliding failure of the fuel lubricating portions in the fuel filter and injector, and have harmful effects on each part of the engine which may result in an engine failure.

Diesel Fuel Requirement
→ Refer to Page 5-46

DANGER
WARNING CAUTION
ADVICE NOTE

Symbols

See the preceding page for the meanings of these symbols.

Reference page

Refers you to a page (or pages) of this manual that concerns the present topic and that you should also read.

All values in this manual are indicated primarily according to the International System of Units (or in SI units) with the conventional metric values and American units indicated in parentheses.

Note: This page is shown only as an example. It is not intended to give you information on your particular engine.

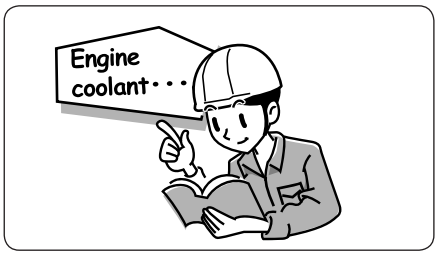

Use chapter/section titles as keys

➡ Page 0-5

Search for the page describing the specific topic by using the general table of contents under CHAPTER DESCRIPTION, the CHAPTER INDEX, and/or the TABLE OF CONTENTS on the first page of each chapter.

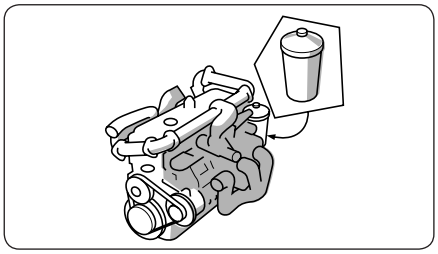

Use the pictorial indexes

➡ Pages 0-6 to 0-7

PICTORIAL INDEX

If you don't know the name of the parts or other device for which you need information, locate the page describing it by using the pictorial indexes.

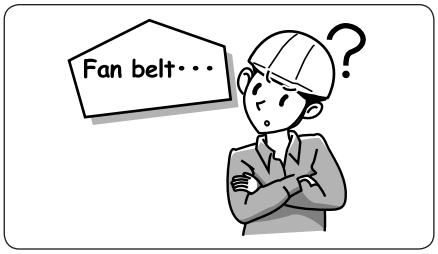

Use device names as keys

➡ Page 8-1

INDEX

If you know the name of the switch or other device for which you need information, locate the page describing it by using the Index at the end of this manual.

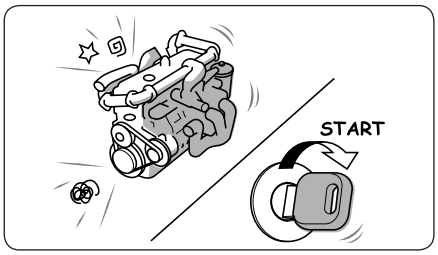

If you have a problem with your engine

➡ Pages 6-2 to 6-7

IN CASE OF EMERGENCY

PICTORIAL INDEX 0-6

INFORMATION 1

IMPORTANT INFORMATION 2
Describes what you should know before you operate the engine safely and smoothly.

HANDLING OF ENGINE 3
Explains how to start and stop the engine and describes various switches.

HANDLING IN COLD SEASON 4
Describes the points you should be aware of to operate the engine safely and smoothly under various conditions and in different seasons.

INSPECTION AND MAINTENANCE 5
Describes daily and periodic inspections and other engine or machine care and maintenance information necessary to keep your engine in good condition.

IN CASE OF EMERGENCY 6
Enumerates possible emergency situations and describes the actions you should take to deal with any one of them.

MAIN DATA 7

INDEX 8

Exterior

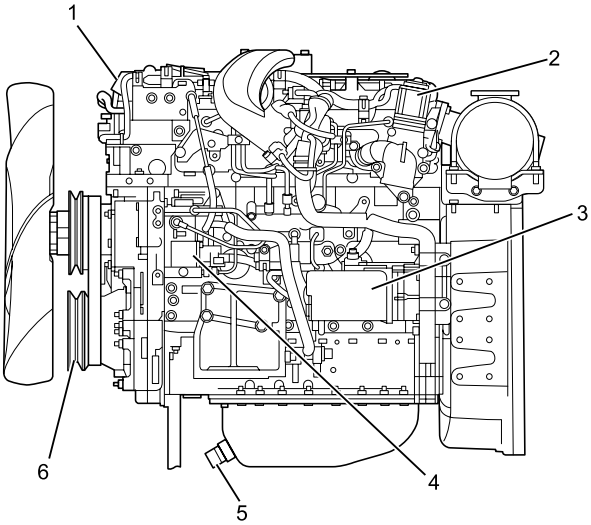

No.	Equipment	Reference Page
1	Water outlet	—
2	EGR valve	—
3	Starter motor	5-34

No.	Equipment	Reference Page
4	Fuel supply pump	5-28
5	Oil drain cock	5-9
6	Crank pulley	—

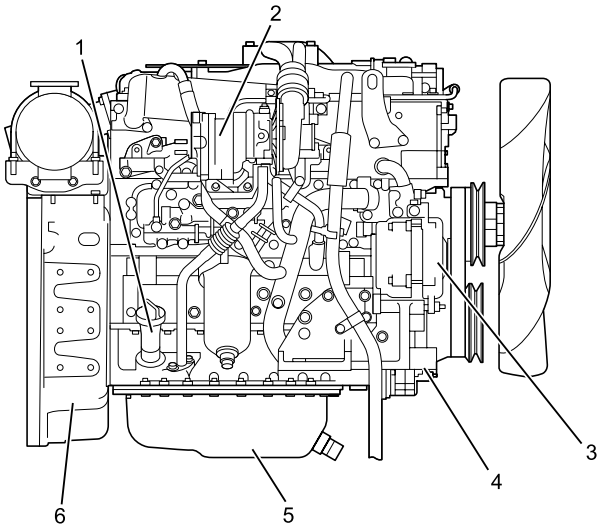

No.	Equipment	Reference Page
1	Oil level gauge	5-7
2	Turbocharger	3-9
3	Generator	5-34

No.	Equipment	Reference Page
4	Water inlet	—
5	Oil pan	—
6	Flywheel housing	—

INFORMATION 1

- Isuzu Genuine Parts 1-2
- Warranty 1-2
- Engine Number/Emission Label 1-3
- Exhaust Emission Regulation Related Parts 1-5

Isuzu Genuine Parts

ISUZU
GENUINE PARTS

"Isuzu genuine parts" are manufactured with the same specifications as those of the parts that are installed at the time of engine assembly, and the quality and performance of them are guaranteed by Isuzu. For parts and oils required for maintenance and service, use "Isuzu genuine parts".
Isuzu shall not be responsible for any failure or accident that is caused by use of parts other than "Isuzu genuine parts".
"Isuzu genuine parts" are packed in the box with the mark above and sold at Isuzu Distributors or the machine manufacturer.

Warranty

If a failure occurs, repair shall be provided for free to the extent described in the separate "warranty certificate" (service handbook).
Please bring the "warranty certificate" (service handbook), and ask the nearest Isuzu Distributor or the machine manufacturer.

Engine Number/Emission Label

- If any of these labels is smudged, damaged, or peeled, contact an Isuzu Distributor or the machine manufacturer.
- For the labels on the actual machine side, refer to the instruction manual from the relevant manufacturer.
- Some examples of these labels are indicated below, but there are many others not shown. The contents of these labels may vary depending on the specifications.

Engine Number/ID (Identification) Labels

The engine number is required for engine registration/inspection. Provide your Isuzu Distributor or the machine manufacturer with names of the machine manufacturer, type, etc. in addition to the engine number when you are having the machine repaired or are ordering replacement parts, so that the Isuzu Distributor or the machine manufacturer can provide service more effectively and efficiently.

⚠ WARNING

- When checking the engine number, make sure to stop the engine to prevent your body from being caught in the rotating unit and confirm that the engine is cooled down. Be careful not to get burned with the heat from the exhaust system, the high temperature coolant or the heat from the engine itself when checking it.

Engine Number

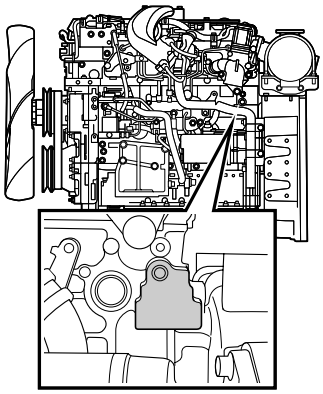

It is stamped on the rear section of the left side (intake manifold side) of the cylinder block.

ID Label

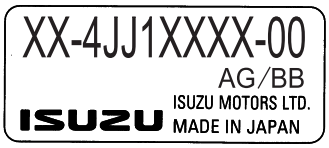

It is attached to the cylinder head cover.

Emission Labels

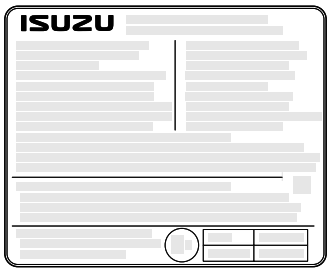

It is attached to the cylinder head cover.
The emission labels on the engine indicate very important instructions and information that you should respect to ensure safe and proper use of the engine. Be sure to read them before using the engine.
The descriptions in the emission labels are only about the engine unit.

DOC Serial Number

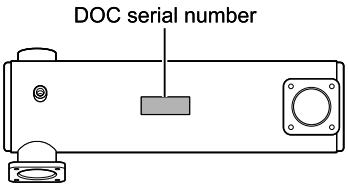

It is stamped on the top surface of the DOC.

NOTE

- Diesel Oxidation Catalyst is an oxidation catalyst for diesel machines.

Exhaust Emission Regulation Related Parts

This engine has been certified under international exhaust emission regulations. Do not remove or modify the equipped parts related to the exhaust gas control system.

⚠ CAUTION

- If the instructions in this manual are not followed and the emission control system begins to function improperly, the engine monitoring system will issue a warning. If this warning is ignored and the engine continues to be operated, the engine output and speed will be restricted and the machine will become inoperable.
  In the case of engines being used as electricity generators, the engine will stop if it continues to be used after warnings are issued.

IMPORTANT INFORMATION 2

- Before Driving 2-2
- Fuel, Lubricant and Coolant 2-3
- Driving 2-6
- Staying Safe 2-10
- Preventing Engine Failure 2-11
- When to Visit an Isuzu Distributor 2-12

This chapter contains information and cautions that you should observe for safe and comfortable engine operation, so be sure to read it before using the engine.

Before Driving

Perform Daily (Pre-Driving) Inspections Before Operation

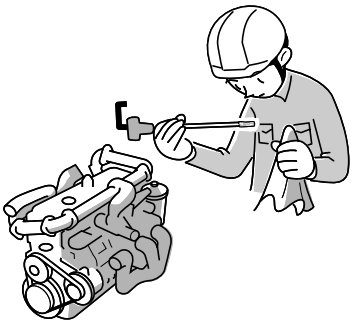

For safe and comfortable driving, grasp the engine operation hours and the conditions of the engine during operation, and perform inspections at appropriate intervals, and provide maintenance works in accordance with the findings of the inspections.
When an inspection reveals an abnormality or there was an abnormality found while driving in the previous day or time, have the machine repaired at an Isuzu Distributor or the machine manufacturer before it is driven again.

Inspection Point	Inspection Item	Reference Page
Engine	Coolant level*	—
	Oil level and contamination*	5-7
	Water removal from fuel	5-23
	Leakage of fuel, engine oil and coolant	—
	Engine starting condition and abnormal noise*	5-5
	Color of exhaust smoke	3-6
	Conditions at low speeds and during acceleration*	5-5
	Fan belt looseness and damage*	5-13
Battery	Fluid level*	5-37
	Looseness and corrosion in terminal section	5-38
Indicator lights and liquid crystal display (LCD) on the actual machine	Engine failure indication	—
Location where an abnormality is found while driving	No abnormality is found in the relevant location	5-5

* : Inspection items that should be performed at an appropriate period determined based on the operation hours, driving conditions, etc. are indicated.

Fuel, Lubricant and Coolant

Use the Specified Fuel

CAUTION

- Using fuel other than extra-low-sulfur diesel fuel (with a sulfur content of 10 ppm or lower for Japan and Europe, 15 ppm or lower for the United States and Canada) may have a harmful effect on the engine, possibly resulting in a breakdown. If a wrong type of fuel is filled in, drain it completely. It is dangerous to start the engine with the wrong type of fuel filled in because doing so may cause a fire or engine damage.
- Any failure which arises from use of fuel other than extra-low-sulfur diesel fuel is excluded from the coverage of warranty.
- Open the fuel cap slowly. If the cap is opened quickly, the fuel may spurt out.

ADVICE

- For fuel of diesel engine, the following characteristics are required.
  Use a type of extra-low-sulfur diesel fuel designated for general diesel vehicles that is compliant with the following standards: Japanese Industrial Standards (JIS) K2204, American Society for Testing and Materials (ASTM) D975 No. 1-D S15 and No. 2-D S15, British Standards (BS) EN590, Deutsche Industrie Normen (DIN) EN590, Canada General Standards Board (CGSB) CGSB-3.517
  - No fine dust is contained.
  - Appropriate degree of viscosity is provided.
  - High in cetane value.
  - Good low-temperature fluidity.
  - Low sulfur content.
  - Low carbon residue.
- Be sure to use extra-low-sulfur diesel fuel. Adding of or mixing with inferior fuel, water remover, other fuel additives, gasoline, heating oil, heavy oil or alcoholic fuel for use may cause a sliding failure of the fuel lubricating portions in the fuel filter and injector, and have harmful effects on each part of the engine which may result in an engine failure.

Diesel Fuel Requirement
→ Refer to Page 5-46

NOTE

- The specifications of diesel fuel vary depending on the season and the region.

Cautions for Driving in Cold Regions and Season → Refer to Page 4-2

Handling the Fuel

WARNING

- Be sure to place the starter switch in the "OFF" position to shut down the engine before refueling the machine because refueling while the engine is running may cause a fire.
- When refueling, putting any flame nearby is strictly prohibited. Do not place a lighted cigarette or something similar nearby which may result in a fire.
- When refueling, take care not to spill the fuel. If any fuel is spilled, carefully wipe it away. Leaving as it is may cause the spilled fuel to be ignited, resulting in a fire.
  Also, the cloths, papers, etc. used for wiping are easily ignitable. Dispose of them properly as flammable waste.
- When the fuel cap is not securely closed, the fuel may leak and cause a fire while driving.

ADVICE

- When dust or water mixes into the fuel, this may lead to an engine failure or accident. When adding the fuel to the fuel tank, take care not to let dust or water enter in the tank. When refilling directly from a drum can out of necessity, particularly be cautious to prevent foreign matters from entering into the tank.
- Add the sufficient amount of fuel to the fuel tank, and periodically open the drain plug located at the bottom part of the tank to discharge the dust and moisture deposited at the bottom.

Lubricant (Engine Oil)

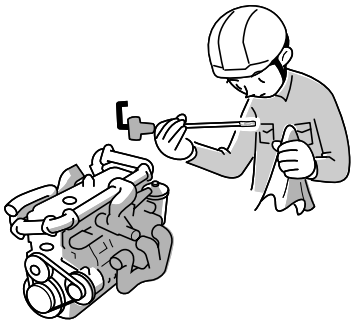

ADVICE

- The engine oil has a significant impact on the performance and service life of the engine, and fuel economy, so it is recommended to use the Isuzu genuine oil or an oil specified by the machine manufacturer. Any failure or accident which arises from use of inappropriate engine oil is excluded from the coverage of warranty.
- The engine oil has the following important functions.
  - Prevents each part of the engine from wearing.
  - Cools down each part of the engine.
  - Cleans each part of the engine.
  - Maintains airtightness of the combustion chambers and prevents rust generation. Replace the engine oil periodically.

Daily (Pre-Driving) Inspection
→ Refer to Page 5-4

Engine Oil → Refer to Page 5-6

Periodic Inspection and Maintenance List → Refer to Page 5-39

Coolant

Replace the engine coolant periodically.
In the cold season, to prevent the engine damage or accident due to freezing of the coolant, the Isuzu genuine long-life coolant (LLC) is available at Isuzu Distributors or the machine manufacturer. Take advantage of this product.

Replacing the Coolant
→ Refer to Page 5-19

Handling the Long-life Coolant
→ Refer to Page 5-18

Driving

Keep Flammable Material Away from the Engine

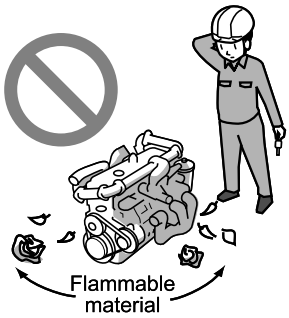

CAUTION

- While the engine is running, and immediately after operating, the exhaust piping is extremely hot. Make sure that there are no flammable items such as plants, dry grass, paper waste, oil, or old tires nearby. Take extra caution when operating the machine indoors.
- Be careful of the exhaust gas heat generated while the engine is idling.

Handling in Initial Use Phase

The engine has gone through the severe inspection before shipping, but furthermore sufficient initial settlement and breaking-in are required for the engine.

ADVICE

- When extreme driving is performed during initial use phase, the oil film may be broken causing abnormal wear or seizure. Especially for the first 100 hours or around, drive as pre-conditioning period without forcing too far, and observe the following cautions.
  - Revving the engine while the gear in the neutral position should not be performed.
  - Sudden acceleration, abrupt starting, or sudden application of load should be avoided.

If the Engine Has not Been Used for a Long Period

ADVICE

- When using the engine that has not been used for a long period of time (one month or longer), perform an inspection thoroughly before starting the engine. Also, confirm that there is no oil leakage and the oil has been sufficiently added to the specified level. If the oil level is insufficient, the oil is not supplied adequately, and a breakdown may result.
- Start the engine and idle it at least for 10 minutes. Also, make sure that the engine produces no abnormal noise.
- For warming up operation, refer to "Starting the Engine" in page 3-2.

Be Careful with Exhaust Emissions

WARNING

- The exhaust gas contains carbon monoxide (CO) which is colorless, odorless and harmful. It is dangerous to inhale the exhaust gas, which may cause carbon monoxide poisoning.
- Do not leave the engine running in a place where ventilation is poor. It is particularly dangerous to run the engine in an indoor place where it can be easily filled with the exhaust gas.
- Inspect the exhaust pipe from time to time. When an abnormality such as a hole or crack due to corrosion and a damaged joint is found on the exhaust pipe, have the machine inspected/serviced at the nearest Isuzu Distributor or the machine manufacturer. Continuous use of the machine without having the defect repaired is dangerous because the exhaust gas may intrude into the actual machine, causing carbon monoxide poisoning.

When Leaving the Engine Running

CAUTION

- When the engine is left running, make sure that there is no flammable material near the exhaust system. Also, be careful not to get burned by high temperature exhaust gases.

Do not Turn Off the Engine While the Machine is Running

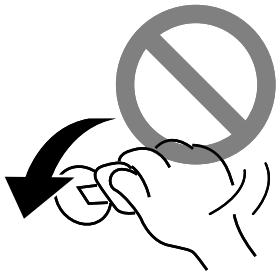

WARNING

- Do not place the starter switch to any position other than the "DRIVE" position while driving.
  If the engine is stopped while driving, the engine may be damaged.
- It is very dangerous because all the electric circuits for various warning/indicator lights stop working.

Recommendations for Warming Up the Engine

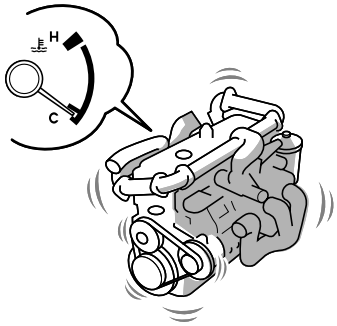

Perform warming-up for approx. 10 minutes.

ADVICE

- Do not rev the engine or quickly accelerate before the engine has sufficiently warmed up (in other words, when the engine is cold).
  The oil is not supplied to the engine sufficiently, and it may cause a failure.
- The exhaust pipe becomes extremely hot while the engine is idling, so make sure there is no flammable material such as a plant, dried grass, paper waste, oil and old tire nearby before starting warm-up operation.

Be Careful with the Too Cold Engine

When the engine is too cold, in addition to accelerating engine wear, it cause deterioration in fuel economy. While driving, when the coolant temperature does not reach the appropriate temperature (approx. 75 - 90°C (167 - 194°F)) indefinitely, take an appropriate action such as inspecting or replacing the thermostat.

When the Warning Light Comes On

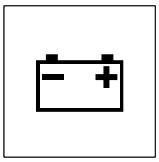

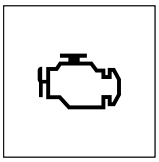

ADVICE

- It is dangerous to ignore the turned on warning light and continue driving. Perform an inspection and take appropriate actions. When the meter shows an abnormality, take necessary actions.

Staying Safe

When the Engine Coolant is Hot

⚠ WARNING

- Do not loosen or remove the radiator cap. Doing so would be dangerous because steam and hot air can shoot out.

Coolant → Refer to Page 5-17

When the Silencer and Exhaust Pipe are Hot

⚠ CAUTION

- While the engine is running, and immediately after operating, the silencer and exhaust piping are extremely hot. Be extremely careful to avoid mistakenly touching these when performing works nearby. Otherwise, you could get burned.

If the Battery Goes Flat

⚠ CAUTION

- When charging the battery from an external power source, remove the battery cables to protect the generator.

When the Battery Goes Flat
→ Refer to Page 6-6

Preventing Engine Failure

Do not Climb onto the Engine

ADVICE

- The engine is the heart of the machine. Do not step on the engine or climb onto it. The head cover and the various connectors may be damaged, leading to an engine failure.

Make Sure the Engine is Inspected at Regular Intervals

ADVICE

- Inspections and maintenance enable you to use the engine with peace of mind. They also extend the engine's service life.

Daily (Pre-Driving) Inspection → Refer to Page 5-4
Engine Oil → Refer to Page 5-6
Periodic Inspection and Maintenance List → Refer to Page 5-39

When to Visit an Isuzu Distributor

Do not Modify the Engine

⚠ CAUTION

- Attaching a part that is not suitable for the performance or function of the machine may lead to an unexpected breakdown or accident. Please consult the Isuzu Distributor or the machine manufacturer for adjustment of the engine or installation of the equipments.

Ask an Isuzu Distributor for Engine Adjustment

⚠ CAUTION

- Do not perform engine adjustment by yourself.
  Be sure to consult your nearest Isuzu Distributor or the machine manufacturer.

Handling Electric Accessories

This engine is an electronically controlled engine, and has many electronic control equipment and electrical components installed. Take special care when performing a high-pressure washing or welding operation.

⚠ CAUTION

- When performing a high-pressure washing for the engine, prevent the wiring connectors and the electronic control equipment from contacting directly with water. Failure to observe this precaution may cause a malfunction or failure.
- When electric welding is performed carelessly onto the engine, the welding current may counterflow in the ground circuits of various parts and may damage the various electric accessories and components, which may result in malfunction of those accessories and components. When electric welding is necessary, be sure to consult the nearest Isuzu Distributor or the machine manufacturer.
- When performing a welding operation on the actual machine out of necessity, remove the battery connectors, and then remove the connectors of electronic control equipment (especially, engine controller (ECM) and turbo controller) before starting the work. Due to the excess current load, the electronic control equipment may be broken.

Inspection and Maintenance

Dependably performing inspections and maintenance prevents faults. Make sure to perform periodic inspections and maintenance. Also, quickly rectify any small fault observed to prevent it from becoming more serious.
When any of the failures listed below occurs, perform inspection and take action following the table.
If a repair cannot be performed by yourself, the corrective action shown in the table does not eliminate the problem or a failure location cannot be identified, contact the nearest Isuzu Distributor or the machine manufacturer.

ADVICE

- ◎ in the "Corrective Action" column indicates that the failure requires a repair or adjustment, so contact the nearest Isuzu Distributor or the machine manufacturer.

Symptom	Cause	Corrective Action	Reference Page
The exhaust smoke is white	Insufficient warming-up	Perform warming-up	3-2
	Too much engine oil	Adjust to the appropriate oil amount	5-7
	Failure of the engine control system	◎	—
	Failure of the fuel system	◎	—
	Continuous idling for a long period (two or more hours)	Raise the engine speed and confirm that white smoke is not emitted	—
The exhaust smoke is black	Failure of the engine control system	◎	—
	Clogging of the air cleaner	Clean or replace the element	5-31
	Failure of the fuel system	◎	—
	Clogging of the exhaust system	◎	—

HANDLING OF ENGINE 3

- Starting the Engine 3-2
- Inspection Method After the Engine Started 3-4
- Stopping the Engine 3-8
- Handling the Engine with Turbocharger 3-9

Starting the Engine

Starting Preparation

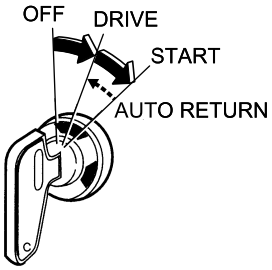

1. Before starting the engine, confirm that the machine is not set to the operation/driving mode and each switch such as for the windshield wiper, lighting, and air conditioner on the actual machine side is turned to "OFF".
2. When the battery switch is equipped, turn it to the "ON" position.
3. Turn the starter switch to the "DRIVE" position and check the lighting of each warning/indicator light and the fuel level.
4. The engine emergency stop function may be set depending on the machine. Confirm that the engine emergency stop function is turned "OFF" before starting the engine. For the engine emergency stop switch, etc., refer to the instruction manual of the machine manufacturer as well.

Starting the Engine

⚠ WARNING

- Do not keep the starter switch turned for 20 seconds or longer. Operating the starter for too long might cause battery failure or might result in overheating and even a fire.
- When starting the engine, make sure that no flammable material is present in the direction of exhaust outlet. If a flammable material is present, it is very dangerous because such material may be deformed, discolored or ignited, leading to a fire.

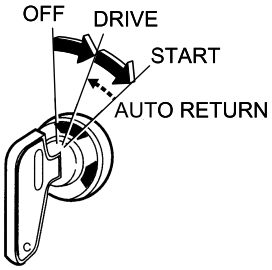

1. Place the accelerator, throttle and operation levers to the idling position.
2. Turn the starter switch to the "DRIVE" position. Also, when the preheat indicator light comes on, wait for 0 - 8 seconds until it turns off.
   This may not come on depending on the conditions.

CAUTION

- Do not perform the starting operation while the preheat indicator light is on.

3. After confirming that the preheat indicator light has gone out, turn the starter switch to the "START" position to start the engine.
4. When the engine is not started with one operation, turn the battery and starter switches to "OFF". Have a break of 60 seconds or longer for starter functionality recovery and engine controller (ECM) communication process, and then perform the starting operation again.

CAUTION

- When an abnormal sound is heard from the starter, if the starting operation is continued, the starter can be burned out. After disconnecting the battery cables, charge the battery from an external power source.
- When the starting operation is performed repeatedly, starting the next motion without waiting for the starter to stop completely may damage or break the starter pinion and the engine ring gear.
- Starter failure may occur if the engine is started when the battery has not been sufficiently charged.

5. When the engine is not started after the starting operating is performed repeatedly, an abnormality in the starting system can be suspected, so inspect the related parts.

CAUTION

- Do not turn the starter switch to the "OFF" position while the engine is running. Depending on the machine on which the engine is installed, this may cause a failure such as a malfunction of meters and battery charging failure.
- Do not apply a starting aid to the intake system. This may damage the engine.

ADVICE

- In the cold season, when the engine is cold, the exhaust smoke (white smoke) may increase.

Inspection Method After the Engine Started

CAUTION

- In the cold season, immediately after the engine is started, the operating sound of the engine may be slightly louder than when it is warmed up and the smoke of the exhaust gas may slightly increase, but this is not abnormal.
- When the engine is not sufficiently warmed up, the engine oil is not supplied adequately, and a breakdown may result. Be practically careful in the cold season.
- Warning display and buzzers may vary depending on the machine manufacturer. For details regarding warning displays and buzzers, refer to the Owner's manual from the machine manufacturer.

Avoid a quick increase of engine speed or load immediately after the engine is started. First, idle the engine for about 10 minutes, and then check the operating status of instruments and warning lights. Also, check for abnormal vibration from the engine, noise, and the conditions of smell and color in the exhaust gas.

Engine Oil Pressure

When the engine oil pressure gauge is equipped, after the engine is warmed up, confirm that the gauge reads the appropriate values during the idle speed operation and the rated speed operation.

ADVICE

- Since the oil pressure is low immediately after the engine is started, take measurements after the engine is warmed up.

Engine oil pressure

Proper value*	
During idle speed operation	During rated speed operation
110 kPa (1 kgf/cm²/**14 psi**) or more	**285 kPa** (3 kgf/cm²/**43 psi**) or more

* Values may vary slightly depending on temperature and oil type.

⚠ CAUTION

- For the following cases, immediately stop the engine, check the oil level and inspect for an oil leakage.
  - The oil pressure gauge reads **200 kPa** (2 kgf/cm²/**28 psi**) or below even when the engine speed is raised
  - The needle of the oil pressure gauge swings widely at low rotation speeds
  - The oil pressure warning light flashes or comes on
- When the oil level is normal and no oil leak is found, a failure in the hydraulic system can be suspected. Promptly consult an Isuzu Distributor or the machine manufacturer.

Engine Warning Light/Engine Failure Code

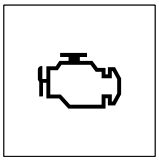

⚠ CAUTION

- When the failure indicator light comes on, or the engine failure code is indicated in the liquid crystal display (LCD) on the actual machine, promptly contact an Isuzu Distributor or the machine manufacturer.

Generator Warning Light

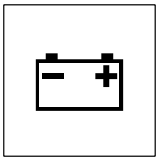

When a current meter is equipped and the charging status is normal, the needle of the current meter swings to the plus direction immediately after the engine is started, and then the amplitude gradually becomes smaller.
For the machine with the generator warning light equipped, make sure to confirm that the generator warning light turns off.

Abnormal Noise of Engine and Color of Exhaust Smoke

CAUTION

- Immediately after the engine is started, the engine sound is louder compared to the sound after the engine is warmed up, and also the color of the exhaust smoke becomes more whitened or more blackened than the smoke discharged during the normal operation. The engine sound and the color of the exhaust smoke turn to normal after the engine is warmed up.
- If an abnormality is found in the engine sound or the color of the exhaust, immediately contact an Isuzu Distributor or the machine manufacturer.

Abnormal Noise of Engine

- Listen to the engine sound carefully, and if an abnormal noise is heard, check the engine and identify the possible cause.

Color of Exhaust Smoke

- Check the combustion state of the fuel by observing the color of the exhaust smoke.
  After the engine is warmed up, the color of the exhaust smoke becomes as follows without any load applied.

Color of exhaust smoke	Combustion state of engine
Colorless or light blue	Normal
Black	Abnormal
White	Abnormal

Also, inspect the exhaust pipe for leakage.

ADVICE

- When the engine is started in a low temperature, moisture vapor may be generated temporarily, but this is not a failure.

Coolant Temperature

Both too high and too low temperatures of the coolant can cause an engine malfunction. The temperature in the range of approx. 75 - 90°C (167 - 194°F) is suitable.
When the engine coolant temperature gauge reads an value exceeding the appropriate temperature, or when the coolant temperature warning light comes on, an dangerous condition of substantially heated engine can be suspected. For details of the coolant temperature warning light, refer to the instruction manual from the machine manufacturer.
When the temperature of the coolant exceeds the appropriate temperature, the fuel flow is restricted. After stopping the machine operation, decrease the engine speed to the level equal to the idling speed, and then confirm that the coolant temperature has dropped to the appropriate temperature before stopping the engine.

CAUTION

- Stopping the engine with its overheated condition should be avoided.
- Driving for a long period of time with a low coolant temperature not only increases the oil and fuel consumptions but also accelerates the engine ware, resulting in an engine failure.

Hour Meter (Cumulative operating hour counter)

The cumulative time during engine operation is counted. Confirm that it is always operating while driving.
Perform inspection and maintenance on each part in accordance with the time count displayed in this hour meter. For details of the hour meter, refer to the instruction manual from the machine manufacturer.

ADVICE

- The hour meter cannot be reset.

Stopping the Engine

1. Confirm that the machine is not set to the operation/driving mode.
2. Before stopping the engine, decrease the engine speed to the idling speed to cool down for approx. 3 minutes.
   During this cooling down period, check for an abnormality in the engine sound, oil pressure, etc.
3. After confirming that the engine temperature has dropped to the specified level, turn the starter switch to "OFF".
4. If a battery switch is equipped, turn the battery switch "OFF" after first turning the starter switch to the "OFF" position and then waiting for 3 minutes or more.
   Systems such as the engine controller (ECM) continue to operate for approximately 3 minutes after the engine is stopped, and may malfunction if the battery power is turned off while these systems are still operating.

ADVICE

- Stopping the engine immediately after driving may cause a failure such as a seizure. Stop the engine after the engine temperature has dropped.
- Make sure to place the starter switch in the "OFF" position after the engine is stopped or when the engine is left unused for a long time. Otherwise the battery may run out.

Handling the Engine with Turbocharger

Starting the Engine

For the engine starting operation, refer to "Starting the Engine" in page 3-2.

ADVICE

- When the engine is cold, do not rev it with the gear placed in the neutral position.
- When starting the engine after it that has been left unused for a long period of time (one month or longer), perform the following works.
  With the air intake duct and oil inlet pipe being removed, add the engine oil to the turbocharger from the oil inlet port. Then, rotate the impeller by hand to lubricate the bearing adequately.
- When adding the oil, make sure that foreign matters such as dust do not enter from the filler port. When oil adding is finished, securely install the oil pipe and the air intake duct.

Stopping the Engine

Before stopping the engine, make sure to idle the engine for approx. 3 minutes. After driving is performed under a severe condition, idle the engine for approx. 5 minutes until the turbocharger is cooled down.

ADVICE

- For the engine with the turbocharger equipped, when the engine is stopped suddenly, the lubricated section on the turbocharger get dried from the high heat, leading to a turbocharger failure.

HANDLING IN COLD SEASON 4

● Cautions for Driving in Cold Regions and Season 4-2

Cautions for Driving in Cold Regions and Season

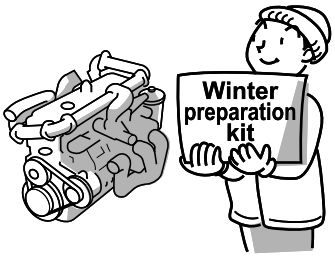

These cautions apply to the sectional intense cold and heavy-snow regions such as a snow-covered area, mountain region, and ski resort, but they can be also referenced for handling in winter time for other regions.
Visit the nearest Isuzu Distributor or the machine manufacturer to arrange the following winter preparations for the engine.

Coolant → **Refer to Page 5-17**
Battery → **Refer to Page 5-35**
Engine Oil → **Refer to Page 5-6**

⚠ CAUTION

- Do not cover the front of the radiator with newspapers, cardboard or any other flammable material to raise the coolant temperature.
- When the coolant temperature does not rise after the engine is warmed up, have the thermostat inspected at the nearest Isuzu Distributor or the machine manufacturer.
- In an area with heavy snow, the snow accumulated around the machine may cause bad ventilation. When the engine is left running under such a condition, the exhaust gas may be accumulated, causing carbon monoxide poisoning. Remove the snow around the machine to take a precaution.

Fuel → Refer to Page 4-3

Handling the Coolant

To prevent the engine damage due to freezing of the coolant, mix the long-life coolant (LLC) and tap water to be an appropriate concentration.

⚠ CAUTION

- When water is used for cooling purpose instead of the long-life coolant, to prevent the engine damage due to freezing, discharge the water from the radiator and the engine after the engine is stopped.

Replacing the Coolant
→ Refer to Page 5-19

Handling the Long-life Coolant
→ Refer to Page 5-18

Replacing the Engine Oil

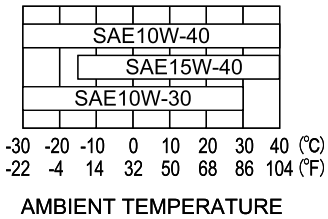

For the engine oil, use Isuzu genuine "BESCO CLEAN SUPER" or an equivalent low ash engine oil throughout all seasons.

Replacing the Engine Oil
→ Refer to Page 5-8

Selecting the Engine Oil
→ Refer to Page 5-45

Fuel

⚠ CAUTION

- Using fuel other than extra-low-sulfur diesel fuel may have a harmful effect on the engine, possibly resulting in a breakdown. If a wrong type of fuel is filled in, drain it completely. It is dangerous to start the engine with the wrong type of fuel filled in because doing so may cause a fire or engine damage.

ADVICE

- Make sure to use extra-low-sulfur diesel fuel (with a sulfur content of 10 ppm or lower for Japan and Europe, 15 ppm or lower for the United States and Canada). Using or mixing in poor quality fuel, water removing agents or other fuel additives, gasoline, kerosene, alcohol based fuels, etc., may cause a sliding failure in the fuel lubricated parts of the fuel filter and injector, adversely effecting various other engine parts and causing a malfunction.

If you drive to a cold region in winter while using diesel fuel for warmer regions that freezes at a relatively high temperature, the fuel may freeze. As the ambient temperature decreases, the fuel in the fuel tank and pipes may freeze like slush, making the engine hard to start.

NOTE

- The specifications of diesel fuel differ according to the climate and region.
- When driving to a cold region, put just enough fuel to reach the colder region in the tank. As soon as you reach the cold region, fill the tank with fuel that has a low freezing temperature.

Fuel Requirements (for United States and Canada Only)

Diesel fuel is sensitive to temperature. All diesel fuel has a certain amount of paraffin components, which are high in energy value and help improve fuel economy. But, when temperatures are below -7°C (20°F), the paraffin components begin turning into wax flakes. If temperatures are low enough, these flakes can obstruct the fuel filters and stop fuel from reaching the engine.
At low temperatures, wax flakes are more likely to form in Type "B" (2-D) fuel than in Type "A" (1-D) (or "winterized" Type "B" (2-D)) fuel. For best operation at temperatures below -7°C (20°F), use Type "A" (1-D), or Type "B" (2-D) blended with Type "A" (1-D) for winter use. When temperatures are consistently below (or near) -18°C (0°F), use Type "A" (1-D) if at all possible. Bear in mind, however, that even Type "A" (1-D) fuel will form wax flakes when temperatures are extremely low.
In cold weather, your fuel filter may become clogged (waxed). To unclog it, move the engine to a warm garage area and warm the filter to between 0°C and 10°C (32°F and 50°F).

ADVICE

- Do not use home heating oil or gasoline in your diesel engine; either may cause engine damage.

The addition of kerosene will not unplug a filter plugged with wax. Warming a "waxed" filter to a temperature of 0°C to 10°C (32°F to 50°F) will return the wax to solution. Filter replacement is not normally required.

Recommended Lubricants and Diesel Fuels → Refer to Page 5-45

Battery

In the winter time, in addition to that the amount of discharge current at the time of engine starting increases, the battery becomes difficult to be charged, so try to maintain the battery always fully charged. Also, the battery fluid of the battery that is close to the discharge state has a low specific gravity and freezes easily, so take good care of heat-retention for the battery.

CAUTION

- When adding distilled water in the cold season, it should be performed immediately before driving. For the adding method, refer to "Inspecting the Battery Fluid Level and Adding the Battery Fluid".
- When the distilled water is added after the engine operation is stopped, the added water does not mix with the battery fluid sufficiently and freezes at the top, which may damage the battery case.

Inspecting the Battery Fluid Level and Adding the Battery Fluid → Refer to Page 5-37

Storage in Cold Regions

Starting the Engine in Very Cold Weather

Before starting the engine, be sure to perform preheating. When it is difficult to start the engine, let it stand for a while to allow the battery to recover, perform adequate preheating, and then start the engine.

Starting the Engine → Refer to Page 3-2

INSPECTION AND MAINTENANCE 5

- Precautions for Inspections and Adjustments 5-2
- Discarded Parts, Oils and Other Liquids 5-3
- Isuzu Genuine Oils and Grease 5-3
- Daily (Pre-Driving) Inspection 5-4
- Inspecting Components that Showed Abnormalities During Previous Operation 5-5
- Engine Conditions 5-5
- Engine Oil 5-6
- Engine Oil Filter 5-11
- Fan Belt 5-13
- Coolant 5-17
- Fuel Filter 5-22
- Electromagnetic Fuel Pump 5-29
- Air Cleaner 5-31
- Valve Clearance/Others 5-32
- Battery 5-35
- Periodic Inspection and Maintenance List 5-39
- Recommended Lubricants and Diesel Fuels 5-45

Precautions for Inspections and Adjustments

WARNING

- Select a place with flat and firm ground for performing maintenance. It would be very dangerous if the engine started to move.
- Make sure to stop the engine and pull out the starter key.
- When performing works with the electrical system, make sure to disconnect the negative (-) battery terminal.
- Do not perform work near an open flame or other heat sources.
- Each part on the engine is hot immediately after driving. Be careful not to get burned. Perform inspection when the engine has cooled down.
- Replacement of each oil and oil filter should be performed when each oil has cooled down sufficiently. Performing work when they are still hot can cause a burn injury.
- When performing a maintenance work on the fuel line or fuel filter, remove the fuel cap. Since the fuel system is under high pressure, the fuel may overspill unless the pressure is relieved, and the spilled fuel may be ignited, possibly leading to a fire.
- Do not leave the engine running in a poorly ventilated indoor place. This could cause carbon monoxide poisoning.

ADVICE

- Use only appropriate tools.
- Do not leave the removed parts or tools on the engine. They may damage the equipment if they are caught in the belts or other moving components.
- When replacing, take sufficient care so that filth or foreign matter does not attach to the removed component.
- Dirty water, dirt and other impurities seriously impair the effectiveness of the oil, and damage the parts, so take sufficient care not to let filth or foreign matter mix into the oil while adding or replacing.
- Confirm that all systems and components are normal after performing the work.

California Proposition 65 Warning

Most engines, including this one, contain and/or emit chemicals known to the State of California to cause cancer and birth defects or other reproductive harm. Engine exhaust, many parts and systems (including some inside the engine), many fluids and some component wear by-products contain and/or emit these chemicals.

Discarded Parts, Oils and Other Liquids

⚠ CAUTION

- Discarded parts, oil, grease and fluids could have an adverse effect on the environment. It is difficult to dispose of these properly, so have an Isuzu Distributor or the machine manufacturer handle all inspections and replacements.

When replacing each oil, filter, or coolant, prepare a pan and discharge it into the pan.
Disposal and treatment of replaced each component, oil, filter or coolant must be conducted in accordance with the specified procedure.

Isuzu Genuine Oils and Grease

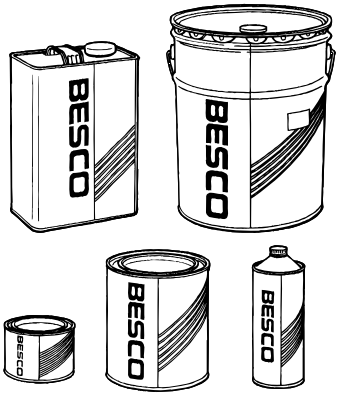

Periodic adding and replacement of oils and greases are very essential works to maintain the engine performance and to prevent failures.
For Isuzu genuine greases and oils, their quality and performance are guaranteed by Isuzu.
For maintenance and service, use of Isuzu genuine greases and oils is recommended.

Daily (Pre-Driving) Inspection

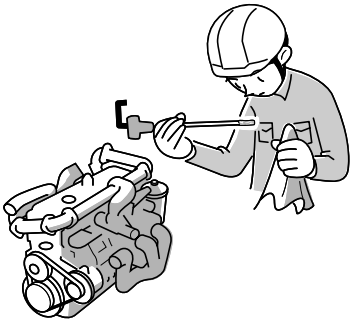

Perform the daily inspection once per day before starting the engine to confirm that there is no abnormality. For safe and comfortable driving, grasp the engine conditions during operation, and perform inspections at appropriate intervals, and provide maintenance works in accordance with the findings of the inspections.
When an inspection reveals an abnormality or there was an abnormality found while driving in the previous day or time, have the machine repaired at an Isuzu Distributor or the machine manufacturer before driving the next time.

Daily (Pre-Driving) Inspection List

[1. Inspecting components that showed abnormalities during the previous operation]

Inspection Item	Reference Page
Inspecting components that showed abnormalities during previous operation	5-5

[2. Inspecting each part of the engine]

Inspection Item	Reference Page
Battery fluid level*	5-37
Looseness and corrosion in terminal section of battery	5-38
Engine oil level and contamination*	5-7
Coolant level*	—
Water removal from fuel	5-23
Leakage of fuel, engine oil and coolant	—
Presence or nonpresence of engine failure indication	—
Fan belt tension and damage*	5-13

* : Inspection items that should be performed at an appropriate period determined based on the operation hours, driving conditions, etc. are indicated.

[3. Starting the engine]

Inspection Item	Reference Page
Engine startability and presence or nonpresence of abnormal noise*	5-5
Color of exhaust smoke	3-6
Conditions at low speeds and during acceleration*	5-5

* : Inspection items that should be performed at an appropriate period determined based on the operation hours, driving conditions, etc. are indicated.

Inspecting Components that Showed Abnormalities During Previous Operation

Check the components that showed abnormalities during the previous operation. Have the location with the abnormality repaired at the nearest Isuzu Distributor or the machine manufacturer before driving the next time.

Engine Conditions

Periodic Inspection and Maintenance List → Refer to Page 5-39

Inspecting Engine Startability and Abnormal Noise

Operate the starter switch to start the engine.
At this time, confirm that the engine is started quickly and also there is no abnormal noise.

Starting the Engine → Refer to Page 3-2

Inspecting Condition of the Engine at Low Speeds and During Acceleration

1. Operate the starter switch to start the engine, and warm up the engine.

Starting the Engine → Refer to Page 3-2

2. Confirm that the engine is running smoothly at the idling speed within the range of normal idling speeds.
   However, the following condition should be excluded.
   • When the coolant temperature is low
3. Confirm that the engine speed increases smoothly and there is no knocking when accelerating gradually by operating the accelerator.

Engine Oil

The engine oil has functions of cooling inside the engine and flushing out the filth inside the engine. The engine oil has a significant impact on the performance and service life of the engine, and fuel economy, so use of the recommended oil is encouraged.

Periodic Inspection and Maintenance List → Refer to Page 5-39

Selecting the Engine Oil → Refer to Page 5-45

ADVICE

- Engine oil lubricates and cools the engine interior components. The quality of the oil is degraded and the quantity of oil is reduced by evaporation, exhaust, and combustion during the engine's operation. Continually using the same oil without checking the level, or without adding and changing it could cause seizure or damage to the engine. Add or change the oil when the quality of the oil has degraded or the quantity is reduced, even if that occurs before expiration of the specified intervals in the Maintenance Schedule, which will differ depending on the conditions of use.

Inspecting the Engine Oil

ADVICE

- When the engine oil level is above the "FULL" position on the oil level gauge, it may cause an engine failure.

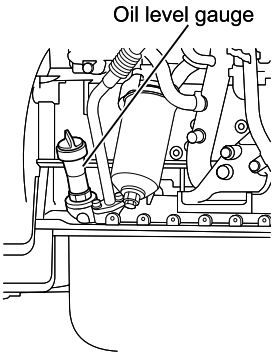

NOTE

- Perform inspection on a level surface before starting the engine.
- Accurate oil level cannot be measured when the engine is running.
- When the engine has been running, wait for 10 - 20 minutes after stopping the engine and then measure the oil level.

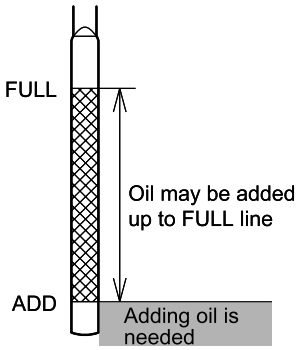

1. Pull out the oil level gauge and wipe off the attached oil.
2. Reinsert the oil level gauge fully and then gently pull it out. When the oil surface is between the "FULL" and "ADD", the oil level is appropriate.
   At this time, also check for the degree of oil contamination and stickiness.
3. When the oil level is insufficient, add the oil up to the "FULL" position.
4. Reinstall the oil level gauge into position after checking the oil level.

Adding the Engine Oil

WARNING

- When adding oil, be careful not to spill any, but keep a workshop rag handy just in case there are any spills.
  If any oil should spill onto the engine, carefully wipe it away. Otherwise, the spilled oil could ignite and a fire could spread.
- Do not leave a flammable item such as a cloth or cotton work glove on the engine. Such items may trigger a fire.

ADVICE

- Prevent dirt from entering the filler port when adding the oil. If foreign matter mixes with the oil, it could damage the engine.
- When the oil is added rapidly through a funnel attached to the filler port, the oil inside the head cover may overflow from the breather. Add the oil gently.
- When the oil is added as much as exceeding the "FULL" position, this may cause an engine malfunction. Wait for 10 - 20 minutes after the oil is added, and make sure to check the oil level using the oil level gauge.
- Make sure to check the oil level on the oil level gauge, as the engine may be damaged if the oil level falls below "ADD" on the oil level gauge.
- Be careful not to spill engine oil onto the fan belt during refilling, as doing so may damage the fan belt or cause accidents.

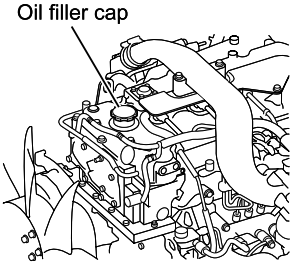

When the engine oil level is near the "ADD" position, remove the oil filler cap, pull out the oil level gauge, and then add the oil. After adding the oil, securely install the oil filler cap and the oil level gauge.

Replacing the Engine Oil

WARNING

- When adding oil, be careful not to spill any, but keep a workshop rag handy just in case there are any spills.
  If any oil should spill onto the engine, carefully wipe it away. Otherwise, the spilled oil could ignite and a fire could spread.
- Do not leave flammable items such as a cloth or cotton work gloves in the engine room. Such items may trigger a fire. Also, do not leave any of the tools.
- When replacing the engine oil after driving, the oil temperature is high. Be careful not to get burned while replacing it.

ADVICE

- When replacing the engine oil, also replace the engine oil filter at the same time.
- Do not perform abrupt engine idling, which may cause an engine failure.
- Make sure to check the oil level using the oil level gauge, because adding the oil in excess of the "FULL" position on the oil level gauge may cause an engine malfunction.
- Make sure to check the oil level on the oil level gauge, as the engine may be damaged if the oil level falls below "ADD" on the oil level gauge.
- Disposal and treatment of the drained oil must be conducted in accordance with the specified procedure.

One-touch type

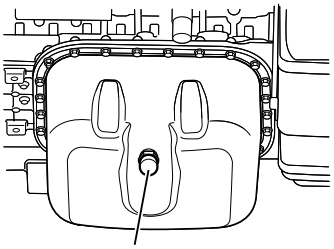

One-touch Type

1. Clean around the oil filler cap so that foreign matter does not enter. Remove the oil filler cap.
2. Place a container for receiving the oil beneath the oil pan and the oil filter.
3. Loosen the cap of the oil drain cock to remove it. Tightly attach the oil drain hose to the oil drain cock all the way to the end to drain the oil.
4. When oil is completely drained out, disconnect the oil drain hose, and wipe off the oil attached to the drain cock.
5. Securely tighten the cap of the oil drain cock. (Tighten the cap lightly until it is seated, and then tighten it further for approx. 60 - 90°.)

ADVICE

- Make sure to wipe off any dirt on the drain cock before installing it.

6. Remove the oil level gauge and carefully fill the specified engine oil into the oil filler.
7. Install the oil level gauge and the filler cap, and start the engine 5 minutes after refueling, and then let it idle. At this time, check whether any oil leak is found around the oil filter and drain cock.

ADVICE

- Do not perform abrupt engine idling, which may cause an engine failure.

8. Stop the engine, wait for 10 - 20 minutes, and then check the oil level with the oil level gauge.

Drain Plug Type

Drain plug type

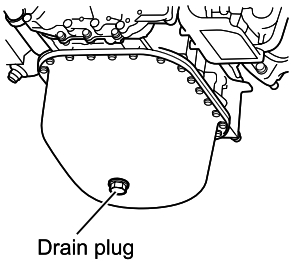

1. Clean around the oil filler cap so that foreign matter does not enter. Remove the oil filler cap.
2. Place a container for receiving the oil beneath the oil pan and the oil filter.
3. Loosen the drain plug to remove it, and then drain the oil.
4. When the oil is completely drained out, replace the packing of the drain plug with a new one, and then install the drain plug.
5. Tighten the drain plug.

Drain plug tightening torque
78.4 N·m (8.0 kgf·m/**58 lb·ft**)

ADVICE

- Make sure to wipe off any dirt on the drain plug before installing it.

6. Remove the oil level gauge and carefully fill the specified engine oil into the oil filler.
7. Install the oil level gauge and the filler cap, and start the engine 5 minutes after refueling, and then let it idle. At this time, check whether any oil leak is found around the oil filter and drain plug.

ADVICE

- Do not perform abrupt engine idling, which may cause an engine failure.

8. Stop the engine, wait for 10 - 20 minutes, and then check the oil level with the oil level gauge.

Engine Oil Filter

The engine oil filter has the function of removing the dirt, dust and other impurities mixed into the engine oil. The engine filter has a significant impact on the performance and service life of the engine, so use of the "Isuzu genuine parts" is recommended.

Periodic Inspection and Maintenance List → Refer to Page 5-39

ADVICE

- When replacing the engine oil filter, it is recommended to use an Isuzu genuine oil filter. When another type of oil filter is used, it may cause a failure.
- Replace the oil filter at the same time as replacing the engine oil.
- Disposal and treatment of the drained oil and the element must be conducted in accordance with the specified procedure.

Changing the Oil Filter

ADVICE

- When installing the oil filter, make sure that the gasket does not get caught at the rim. This could cause oil leakage.
- Any dirt on the cock should be wiped off before installing it.
- Do not perform abrupt engine idling, which may cause an engine failure.
- After replacement is completed, test run the engine and confirm that there is no oil leakage from the area around the filter.

1. Clean around the oil filler cap so that foreign matter does not enter. Remove the oil filler cap.
2. Place a container for receiving the oil beneath the oil pan and the oil filter.
3. Remove the oil filter drain plug and drain the oil.

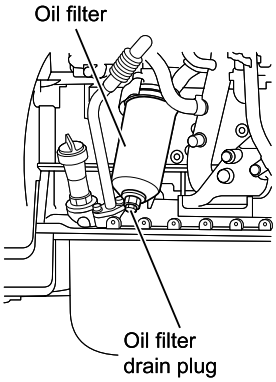

4. Remove the center bolt and remove the oil filter case and element.
5. Apply a thin layer of clean engine oil to the oil gasket of the new element.
6. Reinstall the new element, oil filter case and center bolt.
7. Tighten the oil filter drain plug.

Center bolt tightening torque
39.2 - 49.0 N·m (4.0 - 5.0 kgf·m/**29 - 36 lb·ft**)

Drain plug tightening torque
19.6 - 29.4 N·m (2.0 - 3.0 kgf·m/**14 - 22 lb·ft**)

8. Remove the oil level gauge and carefully fill the specified engine oil into the oil filler.
9. Install the oil level gauge and the filler cap, and start the engine 5 minutes after refueling, and then let it idle. At this time, check whether any oil leak is found around the oil filter and drain plug.
10. Stop the engine, wait for 10 - 20 minutes, and then check the oil level with the oil level gauge.

Fan Belt

The fan belt has the function of conveying the driving force of the engine to the electricity related/auxiliary equipment to operate each mechanism.
When a bad quality belt is used as a replacement, a trouble such as abnormal noise generation, engine stop and insufficient battery charging may be caused due to belt rapid wear or belt breakage. When replacing the fan belt, it is recommended to use the "Isuzu genuine parts".

Periodic Inspection and Maintenance List → Refer to Page 5-39

⚠ CAUTION

- The V ribbed fan belt adopted in the engine requires more accurate belt tension adjustment than that of a conventional V belt. When the tension is improper, in addition to belt squeak or belt breakage, the bearing of water pump or generator may be damaged. When the fan belt is cut, electricity is not properly generated, and it becomes a cause of overheating, so check the tension of the fan belt extremely carefully.
- To accurately check fan belt tension, use a sonic wave tension gauge and inspect to see if the frequency is within the specified range. Ask about sonic wave tension gauges at your Isuzu Distributor or the machine manufacturer.

[Cautions for belt adjustment]

- Initial stretching takes place in any new belt after installation. Also, to fit the belt well in the pulley groove, adjust the belt following the adjustment procedure below regardless of new installation or tension adjustment.
  - Adjust the belt alignment and belt tension in accordance with the specified procedure.
  - Start the engine and allow it to idle for at least 5 minutes in order to run-in the belt.
  - Stop the engine, and again adjust the belt tension to the standard value.

Inspecting the Fan Belt

Press the center of the belt with a hand, and check whether the belt deflects only slightly.
Also, check the belt for a damage.

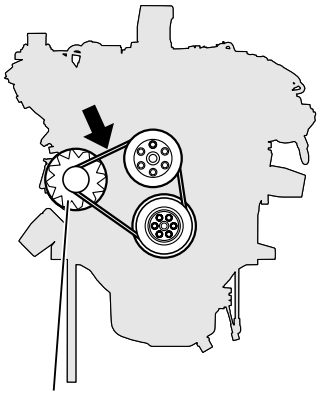

Measurement of Deflection Amount and Vibration Frequency

Press the middle of the belt with a force of approx. **98 N** (approx. 10 kgf/**22 lb**), and check whether the amount of deflection is within the range of standard values.
Measure vibration frequency according to the usage method for the ultrasonic tension gauge and check that it is within the standard values range.
When the value is not within the range, adjust the tension. Also, check the belt for a damage such as a scratch and crack. When the belt adjusting allowance is no longer available, when crack, damage or abnormal wear is found, or when the belt squeaks during driving even after the belt tension has been adjusted, replace the belt.

	Standard value [amount of deflection]	Standard value [vibration frequency]
New belt	4.2 - 5.0 mm (0.17 - 0.20 in)	220 - 244 Hz
When reused	6.6 - 7.4 mm (0.26 - 0.29 in)	182 - 206 Hz

Adjusting the Fan Belt

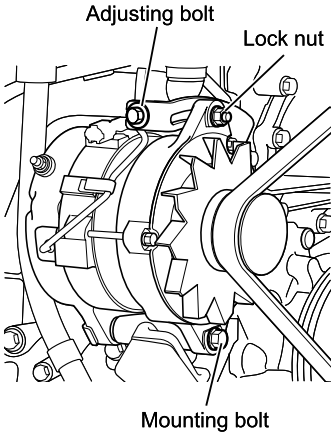

1. Loosen the lock nut and mounting bolt at the top and bottom of the generator, and lightly tighten to the point where the lock nut and mounting bolt bearing surfaces are seated.
2. Turn the adjusting bolt until the belt tension falls within the standard value range.
3. After the adjustment, firmly tighten the loosened lock nut and mounting bolt to the specified torque.

Lock nut tightening torque
20 - 30 N·m (2.0 - 3.1 kgf·m/**14 - 22 lb·ft**)

Mounting bolt tightening torque
44 - 58 N·m (4.5 - 5.9 kgf·m/**33 - 43 lb·ft**)

Replacing the Fan Belt

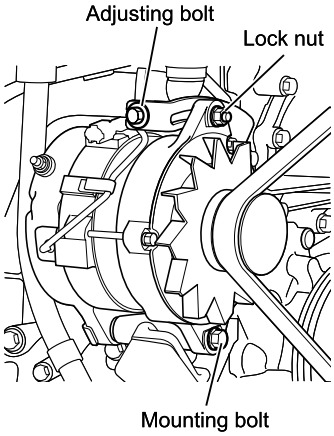

1. Loosen the lock nut and mounting bolt at the top and bottom of the generator, and remove the belt from the pulleys.
2. Pull out the belt through the opening in the fan guide.
3. Insert the new belt through the opening in the fan guide and install the belt while aligning it with the grooves of the generator pulley and crankshaft pulley.
4. Lightly tighten to the point where the bearing surfaces of the lock nut and mounting bolt at the top and bottom of the generator are seated.
5. Turn the adjusting bolt until the belt tension falls within the standard value range.
6. After the adjustment, firmly tighten the loosened lock nut and mounting bolt to the specified torque.

Lock nut tightening torque
20 - 30 N·m (2.0 - 3.1 kgf·m/**14 - 22 lb·ft**)

Mounting bolt tightening torque
44 - 58 N·m (4.5 - 5.9 kgf·m/**33 - 43 lb·ft**)

7. After the adjustment, run the engine at the idling speed for approx. 5 minutes, and then stop the engine to recheck the belt tension.

Inspecting the Fan Belt
→ Refer to Page 5-14

⚠ CAUTION

- When the generator is fixed, the belt tension slightly changes, so check the belt tension again after the generator is fixed.
- If the lock nut and mounting bolt that are fixing the generator are not tightened securely, they may be loosened by the vibrations generated during engine operation, which may cause damage to the components or an accident.

Coolant

The coolant is a type of fluid which is made by mixing tap water and the long-life coolant "BESCO LLC SUPER TYPE E or BESCO LLC SUPER TYPE AS" with an appropriate ratio. It has the function of cooling off the heat generated by combustion or friction inside the engine.

Periodic Inspection and Maintenance List → Refer to Page 5-39

WARNING

- Inspection, adding or replacement of the coolant should be performed when the engine has cooled down sufficiently.
- Do not loosen or remove the cap of the radiator or reserve tank when the temperature of coolant is still high. Hot vapor or boiling water may burst out and cause a burn. Cover the cap with a cloth, etc. and remove it gradually when the engine has cooled down sufficiently and the temperature of the coolant has dropped.
- When removing the cap of the radiator or reserve tank, use a thick cloth to cover the cap and loosen it gradually.
- The coolant is toxic and must not be ingested. If the coolant is mistakenly ingested, immediately vomit it and seek prompt medical attention.
- When the coolant gets in your eyes, rinse it off immediately with a large amount of water for 15 minutes or longer. Also, if still an abnormality such as irritation is felt, seek medical attention.
- When the coolant gets on your skin, rinse it off using a soap with a large amount of water. Also, if an abnormality is observed, seek medical attention.
- The coolant is flammable. Keep flames away from it. Also, the coolant could ignite if it comes in contact with a hot surface, such as the exhaust manifold. Exercise caution to prevent this from happening.

ADVICE

- Replace the coolant periodically.
  When the coolant is not replaced periodically, rust may be generated due to degradation of the coolant, which may cause a water leakage or clogging of the radiator or heater core.

NOTE

[Coolant]

- A type of fluid which is made by mixing tap water and the long-life coolant "BESCO LLC SUPER TYPE E or BESCO LLC SUPER TYPE AS" with an appropriate ratio.

Handling the Long-life Coolant

To prevent the engine damage due to freezing of the coolant and to protect the cooling system from corrosion, mix the Isuzu specified long-life coolant (LLC) and tap water with an appropriate ratio.

Usage region	Outside temperature	Long-life coolant concentration
Warm region (other than the cold region specifications)	-12°C (10°F) or above	30%
Cold region (Cold region specifications)	-30°C (-22°F) or above	50%

WARNING

- The long-life coolant (LLC) is toxic and must not be ingested. If the coolant is mistakenly ingested, immediately vomit it and seek prompt medical attention.
- When the long-life coolant gets in your eyes, rinse it off immediately with a large amount of water for 15 minutes or longer. Also, if still an abnormality such as irritation is felt, seek medical attention.
- When it gets on your skin, rinse it off using a soap with a large amount of water. Also, if an abnormality is observed, seek medical attention.
- For storage, close the cap securely and keep it in a place inaccessible to children.
- The long-life coolant is flammable. Keep flames away from it. Also, it could ignite if it comes in contact with a hot surface, such as the exhaust manifold. Exercise caution to prevent this from happening.

CAUTION

- As for the long-life coolant (LLC), make sure to use either BESCO LLC SUPER TYPE E or BESCO LLC SUPER TYPE AS.
- When the long-life coolant which is specified by Isuzu is not used, the engine, radiator or heater core may be damaged.

ADVICE

- The water which is mixed with the long-life coolant (LLC) has to be tap water (soft water), not well water or river water.
- Do not use the long-life coolant at any concentration other than the one specified.
  When the long-life coolant concentration is 60% or higher, overheating is likely to occur, while when it is 30% or lower, the anti-corrosion function is not provided sufficiently.
- Using the long-life coolant at any concentration other than the one specified may reduce the anti-freezing performance, and the coolant may freeze. Adjust the concentration of the coolant depending on the situation.
- If the coolant decreases rapidly, go immediately to the nearest Isuzu Distributor or the machine manufacturer for a check or repair.

Inspecting the Coolant

Inspect the radiator and radiator hose for a crack, damage and water leakage. Also, check whether a stain of water leakage is left on the ground surface where the machine is set. When a crack, damage or water leakage is found, contact an Isuzu Distributor or the machine manufacturer.

CAUTION

- Use without fixing the water leakage can cause engine seizure.

Replacing the Coolant

Clean also the coolant passages using a cleaning agent. Also, clean the radiator and radiator cap.
It is recommended to use the Isuzu genuine radiator cleaner for cleaning of coolant passages.

Cleaning the Radiator Exterior
→ Refer to Page 5-21

ADVICE

- After the coolant is discharged, do not start the engine when there is no water in the radiator. This could cause the engine to seize up.
- Hand tighten the drain cock of the radiator. Tightening with pliers or some other tool could damage it.
- Disposal and treatment of the discharged coolant must be conducted in accordance with the specified procedure.

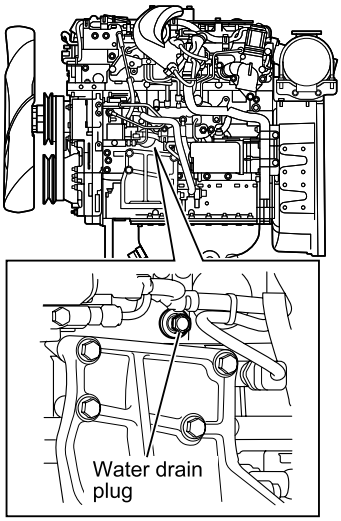

Draining the Cooling System

1. Remove the radiator cap.
2. Open the coolant drain cock on the radiator to discharge the coolant.
3. Loosen the water drain plug located on the left side of the cylinder block, and discharge the coolant inside the engine.
4. Close the drain cock and the water drain plug.

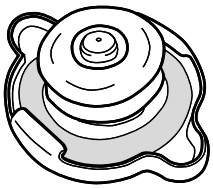

Cleaning the Coolant Passages

1. Fill the radiator with tap water up to the top of the opening.
2. Check and clean the radiator cap. Replace the cap if it is damaged.
3. Firmly close the radiator cap.
4. Fill the reserve tank with tap water up to the specified level.
5. Close the cap of the reserve tank.
6. Start the engine to idle it for 20 minutes, and then stop the engine, wait until it cools down sufficiently, and drain out the water.

Filling the Cooling System

1. Close the radiator drain cock and the engine water drain plug.
2. From the radiator water inlet, slowly add the coolant up to the filler opening. To avoid air intrusion, the coolant should be supplied slowly.
3. Firmly close the radiator cap.
4. Fill the reserve tank with the coolant up to the specified level, and close the cap of the reserve tank.

⚠ WARNING

- Exercise caution to prevent this overflowed coolant from splashing onto the exhaust system components.
- Make sure to wipe off any spilled coolant as it may induce a fire, etc.

5. Start the engine and then stop the engine after idling for approx. 3 minutes.
6. After making sure that the coolant has cooled down, slowly remove the radiator cap and if the coolant level has lowered, add the coolant up to the radiator filler opening.
7. Securely install the radiator cap, start the engine and warm the engine by idling. If there is a heater, it is necessary to clear out air from the heater circuits. Set the temperature setting and blower speed to MAX. Additionally, warm up the engine at approx. 1,500 rpm or more until the engine coolant temperature gauge stabilizes (coolant temperature: approx. 90°C (194°F)), and stop the engine.
8. When the engine has cooled down, the inside of the radiator will be at a negative pressure and coolant will automatically be supplied to the radiator side from the reserve tank. After making sure that the coolant has cooled down, slowly remove the radiator cap and if the coolant level has lowered, add the coolant up to the radiator filler opening . If the coolant level is abnormally low, check for coolant leaks.
9. Firmly close the radiator cap.
10. Fill the reserve tank with the coolant up to the specified level, and close the cap of the reserve tank.

Cleaning the Radiator Exterior

When the radiator fin is clogged with filth such as dirt and dry grass, it may interrupt the air flow and cause overheat.
Periodically check for the clogging condition, and when clogging is observed, clean the radiator fin with steam or pressured water.

Fuel Filter

The fuel filter has the function of removing filth or moisture in the fuel. The fuel filter has a significant impact on the performance and service life of the engine and fuel economy, so use of the "Isuzu genuine parts" is recommended.
Also, depending on the machine, an electromagnetic fuel pump which incorporates a fuel filter may be equipped.

Electromagnetic Fuel Pump
→ Refer to Page 5-29

⚠ CAUTION

- When moisture is not discharged, starting difficulties may be caused due to freezing.
- When the element of the fuel filter is clogged, it can cause a decrease in engine output, engine failure, engine failure indication or engine stop, so perform periodic inspections and maintenance.

Periodic Inspection and Maintenance List → Refer to Page 5-39

Draining Water from the Fuel Filter

The fuel filter has the structure of that the internal float floats up when water is deposited inside. When the float floats up to the bottom of the element, make sure to remove the water.

CAUTION

- Do not use any alcohol-based water remover or cleaning agent. If alcohol-based water remover or cleaning agent is attached to a plastic component, it can cause deterioration in fluid level visibility due to crazing, or in the worst case, it can lead to a component crack, which can cause a fuel leakage.
- When the fuel is attached to the engine, wipe it off completely.
- It takes longer to start the engine than usual immediately after water removal is performed. If the engine does not get started within 10 seconds, wait for a while and then restart it.
- Since the fuel is contained in the drained water, disposal and treatment of the drained water must be conducted in accordance with the specified procedure.

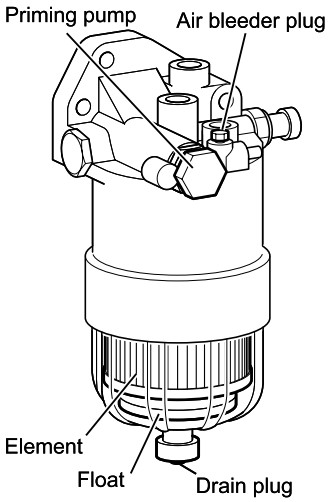

1. Loosen the air bleeder plug at the top of the fuel filter.
2. Loosen the drain plug at the bottom of the case to discharge the water deposited inside.
3. After the water is removed, make sure to tighten the air bleeder plug and drain plug and remove the air from the fuel.

Air bleeder plug tightening torque
8 - 12 N·m (0.8 - 1.2 kgf·m/**6 - 9 lb·ft**)

ADVICE

- Be careful not to over-tighten the air bleeder plug.

Bleeding the Fuel System

When air mixes into the fuel system, this can cause a difficulty in engine starting or engine malfunction. When the fuel tank is emptied, or when water removal from fuel or element replacement is performed, make sure to carry out air removal.

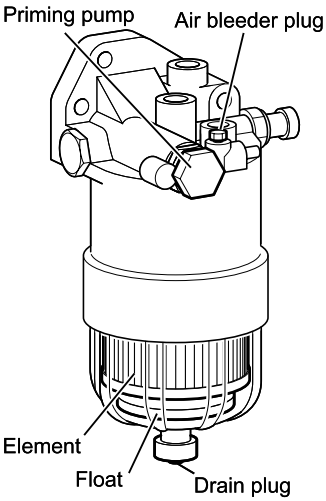

1. Turn the starter switch to "DRIVE" position, and activate the electromagnetic pump, etc.
2. Loosen the air bleeder plug of the fuel filter sufficiently, and operate the priming pump until the fuel comes out.
3. Tighten the air bleeder plug, and operate the priming pump until the fuel filter is filled with the fuel (10 times or more).
4. Wait for approx. 1 minute, and loosen the air bleeder plug to remove the air from the fuel filter.
5. Repeat Steps 2 through 4 until air does not come out from the air bleeder plug. (at least 3 times)
6. Securely tighten the air bleeder plug, and wipe off the fuel spread around.
7. Start the engine without manipulating the engine speed on the machine side. If the engine does not start at this time, repeat the procedure from Step 3.
8. After the engine has started, allow it to idle for 5 seconds.
9. Slowly raise the engine speed, and maintain the status for 3 minutes.
10. Raise the engine speed up to the maximum speed by operating it to be the maximum speed on the machine side. Repeat this operation several times.

⚠ WARNING

- Start the engine to inspect for a leakage in the fuel system. A leakage can cause a fire.

Changing the Fuel Filter

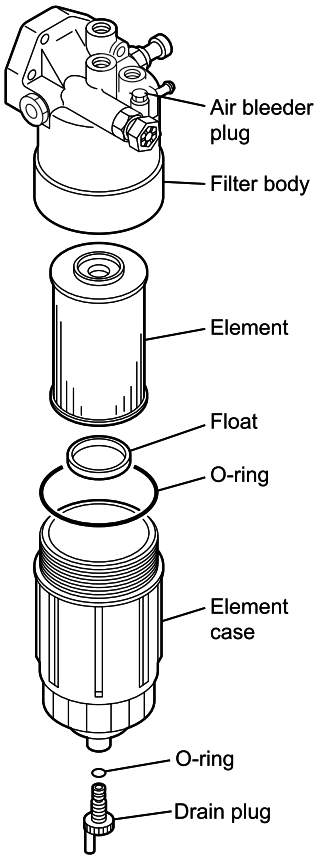

ADVICE

- When replacing the filter, also replace the O-ring with the one supplied with the element kit.
- Disposal and treatment of the replaced filter must be conducted in accordance with the specified procedure.

1. Loosen the drain plug and air bleeder plug to discharge the fuel inside the filter.

CAUTION

- Use a container or something similar to receive the discharged fuel so that the fuel does not splash on the engine.
- To avoid intrusion of filth, do not touch the joint between the filter body and element with a work glove or cloth.
- Since the fuel is present inside the element case, be careful not to make a mess in the area around when removing the components. Also, be cautious of fire.

2. Use the special filter wrench to remove the case.

ADVICE

- Clean any foreign matter or dirt at the bottom of inside the element case.
- Reuse of the element may cause a trouble. Make sure to replace it with a new one.

3. Replace the O-ring of the case and drain plug with new ones, place the new element in the case, thinly apply the fuel on the O-ring, and screw in the element.
   When the O-ring contacts the seal surface, tighten with the special filter wrench.

Case tightening torque
28.0 - 32.0 N·m (2.9 - 3.3 kgf·m/**21 - 24 lb·ft**)

Drain plug tightening torque	
Type 1	**2.0 - 3.0 N·m** (0.2 - 0.3 kgf·m/**1 - 2 lb·ft**)
Type 2	**1.5 - 2.5 N·m** (0.15 - 0.25 kgf·m/**1 - 2 lb·ft**)

4. Remove the air from the fuel.

Bleeding the Fuel System
→ **Refer to Page 5-24**

WARNING

- After replacement is performed, test run the engine and confirm that there is no fuel leakage from the area around the filter. Fuel leakage may cause a fire.

Changing the Pre-fuel Filter

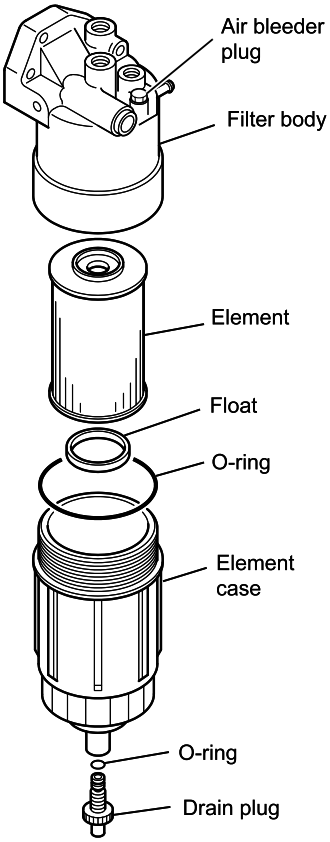

ADVICE

- When replacing the filter, also replace the O-ring with the one supplied with the element kit.
- Disposal and treatment of the replaced element must be conducted in accordance with the specified procedure.

1. Loosen the drain plug and air bleeder plug to discharge the fuel inside the filter.

CAUTION

- Use a container or something similar to receive the discharged fuel so that the fuel does not splash on the engine.
- To avoid intrusion of filth, do not touch the joint between the filter body and element with a work glove or cloth.
- Since the fuel is present inside the element case, be careful not to make a mess in the area around when removing the components. Also, be cautious of fire.

2. Use the special filter wrench to remove the case.

ADVICE

- Clean any foreign matter or dirt at the bottom of inside the element case.
- Reuse of the element may cause a trouble. Make sure to replace it with a new one.
- Do not put the discharged fuel back in the fuel tank, and dispose of the fuel in accordance with the specified procedure.

3. Replace the O-ring of the case and drain plug with new ones, place the new element in the case, thinly apply the fuel on the O-ring, and screw in the element.
   When the O-ring contacts the seal surface, tighten with the special filter wrench.

Case tightening torque
28.0 - 32.0 N·m (2.9 - 3.3 kgf·m/**21 - 24 lb·ft**)

Drain plug tightening torque
2.0 - 3.0 N·m (0.2 - 0.3 kgf·m/**1 - 2 lb·ft**)

4. Remove the air from the fuel.

Bleeding the Fuel System
→ Refer to Page 5-24

WARNING

- After replacement is performed, test run the engine and confirm that there is no fuel leakage from the area around the filter. Fuel leakage may cause a fire.

Inspecting the Supply Pump Strainer

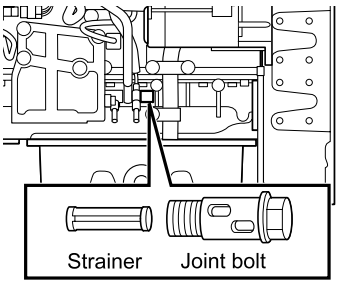

When a phenomenon such as output decrease and engine stop appears, and this phenomenon is not resolved after replacing the fuel filter element, replace the supply pump strainer (integrated joint bolt).

Joint bolt tightening torque
14.6 - 24.6 N·m (1.5 - 2.5 kgf·m/**11 - 18 lb·ft**)

CAUTION

- The supply pump strainer is assembled into the joint bolt located at the inlet side of the supply pump. This joint bolt is a component which cannot be disassembled, so do not pull out the strainer inside.
- When the fuel pipe has been removed, make sure to replace the packing with a new one.

Electromagnetic Fuel Pump

Replacing or Cleaning the Filter

The electromagnetic fuel pump may be equipped depending on the machine.
The filter inside the pump is either paper type or steel mesh type. When filter replacement is required, contact an Isuzu Distributor or the machine manufacturer. Also, for the replacement or cleaning periods of each type, refer to the periodic inspection and maintenance list.

Periodic Inspection and Maintenance List → Refer to Page 5-39

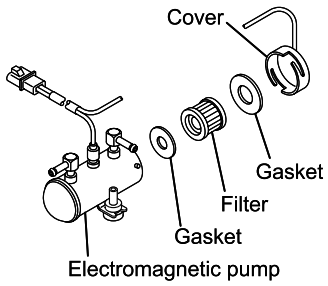

ADVICE

- When the filter is removed, make sure to replace the gasket and clean the magnet portion inside the cover.

1. Disconnect the wiring attached to the pump cover. Turn the cover using a wrench to remove it.

WARNING

- When removing since the fuel is present inside the pump, use a container or something similar to receive the fuel, so that the fuel does not splash on the engine. Also, be cautious of fire.

2. Remove the filter and gasket, and replace or clean them.

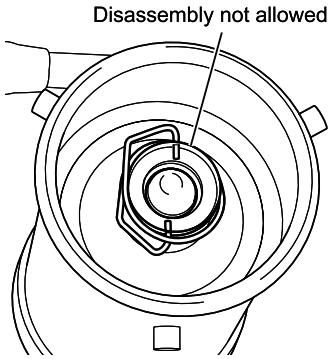

ADVICE

- Do not disassemble the piston and its parts locating at the inside center of the electromagnetic pump.
- When removing the gasket, hold the outer part of the gasket with your fingers and pull it out.

- As for the paper type, replace the filter and gasket with new ones.
- For the steel mesh type, clean the removed filter with clean diesel fuel, and blow off the dirt and other impurities using high-pressured air. Then, install the filter and a new gasket.

3. Install the cover. Securely tighten it all the way to the end using the wrench.

ADVICE

- After the cover has been installed, make sure to check the airtightness.
- The interval of replacement or cleaning should be shortened depending on the status of fuel management and refuel.

Handling the Fuel Piping

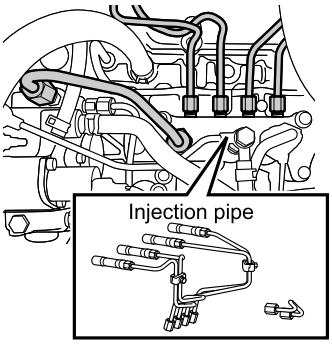

When the injection pipe (high-pressure piping) is removed, do not reuse it.
Because it uses the metal contact sealing, if it is reused, the seal surface may be shifted, which cause fuel leakage.

Air Cleaner

The air cleaner cleans the air that is sent to the engine by removing the dust and other impurities contained in the air.
When the element of the air cleaner is dirty, the intake air volume decreases, which cause drop in engine output or engine malfunction. Also, when the element is damaged, the cylinder portion or valve may wear due to the dust sucked in, which may lead to increase in oil consumption or drop in engine output, and not only shorten the engine service life but also cause a engine failure or an accident. In addition, for the engine with turbocharger, it can cause a failure or an accident of the turbocharger itself.
For handling the air cleaner, perform periodic inspections and maintenance as specified by the machine manufacturer. Also, for use in a dusty environment, consult the machine manufacture for application of a pre-filter.

⚠ CAUTION

- When using in a dusty environment, shorten the interval of cleaning or replacement.
- When a damage is found on the air cleaner during cleaning, replace the element.
- When disassembling the air cleaner, be careful not to cause an air leak.
- The mass air flow (MAF) sensor is installed to the air cleaner inlet duct. If the sensing portion of the MAF sensor malfunctions due to the adherence of dust, using commercial cleaning agents, etc., engine output may be restricted.
  Take care to prevent dust from entering the inlet duct when replacing the air cleaner element. Also, if using commercial cleaning agents, etc., be careful not to spray them into the MAF sensor.

Valve Clearance/Others

The following items are the inspection and maintenance items that enable smooth and long-term use of the engine and require specialized maintenance techniques. In accordance with the inspection and maintenance list, consult the nearest Isuzu Distributor or the machine manufacturer periodically for inspection and adjustment.

ADVICE

- Inspection and maintenance should be performed by personnel who are qualified or experienced in maintenance. A general user or inexperienced person should not perform the works.

Adjusting the Valve Clearance

Perform periodic inspections and cleanings in accordance with the periodic inspection and maintenance list. Also, perform an inspection and maintenance when the sound of rocker arm is loud or when the engine is not working well without a failure in the fuel system.

Periodic Inspection and Maintenance List → Refer to Page 5-39

CAUTION

- Adjustment of the valve clearance should be performed when the engine is cold.

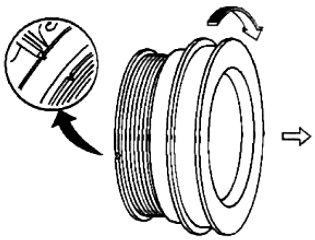

1. Rotate the crankshaft in the forward direction until the TDC mark in the crank pulley rulings aligns with the timing mark of the timing gear case cover. Move the piston of the No. 1 cylinder or No. 4 cylinder to the compression top dead center.

CAUTION

- Before adjusting the valve clearance, confirm that the rocker arm shaft bracket nuts are not loosened, and tighten them as necessary.

2. Check for play in the rocker arms of the No. 1 cylinder intake and exhaust valves. When play is present for either of them, it indicates that the piston of the No. 1 cylinder is at the top dead center of the compression stroke.
   When there is no play present in the rocker arms of the No. 1 cylinder, it indicates that the piston of the No. 4 cylinder is at the top dead center of the compression stroke.
3. Adjust the valve clearance with the piston of the No. 1 cylinder or No. 4 cylinder set at the relevant top dead center of the compression stroke.
   The "●" mark in the table indicates the cylinder and valve to be adjusted when the piston of the No. 1 cylinder or the No. 4 cylinder is at the relevant top dead center of the compression stroke.

No. 1 cylinder top dead center of the compression stroke

1		2		3		4	
Exhaust	Intake	Exhaust	Intake	Exhaust	Intake	Exhaust	Intake
●	●		●	●			

No. 4 cylinder top dead center of the compression stroke

1		2		3		4	
Exhaust	Intake	Exhaust	Intake	Exhaust	Intake	Exhaust	Intake
		●			●	●	●

Valve clearance (when cold)	
Exhaust	0.15 mm (0.006 in)
Intake	0.15 mm (0.006 in)

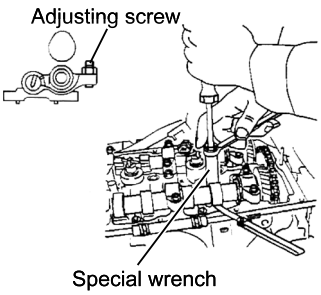

4. Loosen the adjusting screws of the rocker arm.
5. Insert a 0.15 mm (0.006 in) thickness gauge between the rocker arm and the cam, and then tighten the rocker arm adjusting screw until the thickness gauge sticks slightly.

6. Loosen the adjust screw for the rocker arm little by little and adjust so that the insertion and extraction of the thickness gauge is the appropriate firmness.
7. Firmly tighten the adjusting screw lock nuts of the rocker arm.

Adjusting screw lock nut tightening torque	
Rocker arm	**15 - 27 N·m** (1.5 - 2.8 kgf·m/**11 - 20 lb·ft**)

8. Rotate the crankshaft 360° in the forward direction, align the TDC mark in the crank pulley rulings with the timing mark, and adjust the clearance of the remaining valves.

Measuring the Engine Compression Pressure

This should be performed at periodic inspections or when the engine output has dropped.

Periodic Inspection and Maintenance List → Refer to Page 5-39

Compression pressure*
2.84 - 3.24 MPa (29 - 33 kgf/cm²/**412.4 - 469.3 psi**)

* Measurement should be taken under the conditions of cranking speed 200 rpm and coolant temperature 20°C (68°F).

ADVICE

- When the compression pressure is below **1,960.0 kPa** (19.99 kgf/cm²/**284 psi**), repair or replace the defective parts on the engine or auxiliary equipment.

Starter, Generator

In accordance with the periodic inspection and maintenance list, clean the commutator of the starter, and check the wear and contact surface conditions of the carbon brush.

Periodic Inspection and Maintenance List → Refer to Page 5-39

Inspecting the Radiator Cap

Check the operating pressure of the radiator cap pressure valve using the radiator compression tester. As for the operating pressure of the pressure valve and the inspection period, follow the provisions specified by the machine manufacturer.

Battery

The battery has the function to operate the various lights and many electric accessories including the engine startup. For inspection and replacement, consult the machine manufacturer.

Periodic Inspection and Maintenance List → Refer to Page 5-39

Battery Handling Precautions

Keep the battery always clean. When it is left unclean, impurities enter in the battery fluid and damage the battery plates or a short circuit occurs at the top of the battery, which may shorten the battery life.

⚠ DANGER

- Using or charging the battery with the battery fluid level being below the lower limit may accelerate battery deterioration or induce heat generation or even explosion.
- If the battery fluid gets in your eyes, immediately wash them with large volume of water for more than 5 minutes and seek medical treatment.
- For ground of electrical components, "negative (-) ground method" has been adopted.
  When handling a metallic object such as a tool in the vicinity of the battery, take care to prevent it from coming into contact with the positive (+) terminal. As the machine itself is negative (-), any such contact can cause a short-circuit and is very dangerous.
- The battery generates extremely flammable hydrogen gas. Do not throw sparks or use a fire near the battery. Failure to observe this precaution can result in explosion should the hydrogen gas be ignited. Also, when wiping off the spilled battery fluid, use a wet cloth to remove it.

WARNING

- Make sure to stop the engine when inspecting the battery.
- The battery fluid is diluted sulfuric acid. Be extremely careful not to let the fluid get on your hands, clothes, or metals. If it happens, wash the fluid away with water immediately.
- When disconnecting the cables from the terminals, start with the negative (-) terminal. Also, when connecting them, the negative (-) terminal should be connected the last.
- When connecting the battery cables, take care to avoid mixing up the positive (+) terminal and the negative (-) terminal. Excess current flows, and the generator or actual machine wiring may be burned out.
- When performing inspection or refill, be careful not to splash the battery fluid on nylon tubes, harnesses, etc., and if it is attached, wash it away with water immediately. Particularly, the nylon tube does not readily withstand acids, so it is likely to become damaged.
- When using a battery charger, be sure to remove the cables from the battery terminals.
- Battery posts, terminals and related accessories contain lead and lead compounds, chemicals known to the State of California to cause cancer and reproductive harm. Wash hands after handling.

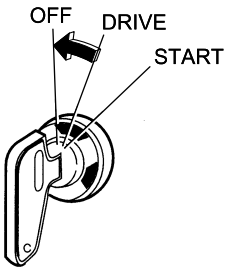

When Performing Inspection and Maintenance

When performing inspection and maintenance on the electrical system including the battery, place the starter switch in the "OFF" position, turn each switch on the actual machine "OFF", and then disconnect the negative (-) terminal of the battery before starting the work.
If inspection or maintenance is performed with the battery connected, the electric components may be damaged.

When Removing Battery

CAUTION

- Systems such as the engine controller (ECM) continue to operate for approximately 3 minutes after the starter switch is turned to the "OFF" position. Removing the battery cable before the engine controller (ECM) has stopped may cause a malfunction.

When removing the battery, disconnect the battery cable negative (-) terminal side first. If a tool contacts the battery positive (+) terminal and the engine with the cable on the negative (-) terminal side connected to the battery, it is dangerous because a short-circuit can be created. Also, this may cause a failure in the electrical system. Also, wait 3 minutes or more after turning the starter switch to the "OFF" position before removing the battery cable negative (-) terminal.

When Charging Battery

- When charging the battery, remove the battery from the machine. Remove the battery cap, and charge the battery in a location with good ventilation. When charging the battery as installed in the machine, remove the battery cables before charging is started.
- When the charger is connected to or disconnected from the battery, ensure that the switch of the charger is turned off.
- Battery cables must always be disconnected when performing quick charging. If the quick charge is performed with the battery cables connected, the generator may be burned out.

When Connecting Battery Cable

When connecting the battery cables, first connect the battery positive (+) terminal side, and then connect the negative (-) terminal at the end.

When Taking Out Power Supply Directly from Battery

Do not take out power supply directly from the battery.
If it is necessary to take out power supply from the battery, consult an Isuzu Distributor or the machine manufacturer.

Inspecting the Battery Fluid Level and Adding the Battery Fluid

ADVICE

- Depending on the battery type, there is a case that the fluid level check method is different or that fluid level check or fluid adding is not required, so carefully read the instruction attached to the battery before starting any work.
- The battery fluid should never be added beyond the specified level. The battery fluid can spill over, and the battery terminals may be corroded. When the battery fluid is spilled, immediately wash it away with water completely.
- When the battery fluid has been added, make sure to charge the battery (through driving). Especially in winter, the battery fluid may freeze causing a damage to the battery case.
- If reduction in the battery fluid is drastic, immediately have it inspected at an Isuzu Distributor or the machine manufacturer.

Inspecting the Specific Gravity of Battery Fluid

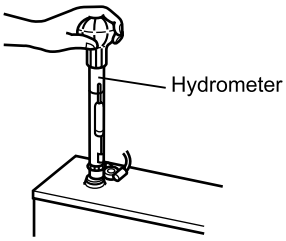

Check the specific gravity of the battery fluid using a hydrometer. When the specific gravity is low, then charge the battery.

Specific gravity of fluid (When the fluid temperature is 20°C (68°F))
1.27 - 1.29

Conversion of Specific Gravity

Measurement of specific gravity should be taken based on the fluid temperature of 20°C (68°F). Measure the fluid temperature, and when the temperature is other than 20°C (68°F), the specific gravity should be converted using the following conversion formula.

Conversion formula
S_{20} = St + 0.0007 (t - 20)

*: S_{20} = Specific gravity at 20°C (68°F) (Standard temperature), St = Measured specific gravity, t = Fluid temperature at measurement

Inspecting the Battery Terminals

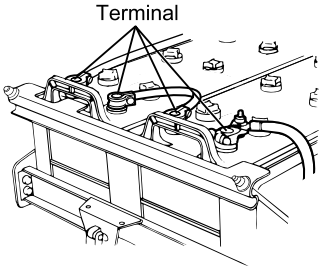

1. Check the terminal section for looseness and corrosion.
2. When the terminal section is corroded and coated with white powder, wash it off with warm water and then wipe fully dry. If corrosion is significant, polish it with a wire brush or sand paper.
3. After cleaning is finished, apply a thin layer of Besco grease to the terminal section, and securely connect the battery cable so that it will not be loosened.

Periodic Inspection and Maintenance List

To manage safe and economical driving, it is recommended to perform inspection and maintenance periodically.

ADVICE

- After 1,500 hours, perform inspection and maintenance for every 250 hours or 500 hours in accordance with this table.

Lubrication System

Inspection/Maintenance Item	Daily	250 hours	500 hours	750 hours	1,000 hours	1,250 hours	1,500 hours	Remarks
Oil level and contamination	●							
Oil leak	●							
Oil pressure gauge indication or lighting of warning light	●							Approx. **285 kPa** (3 kgf/cm²/**43 psi**) or more per 2,200 min^{-1}
Oil pressure warning light	●							Off (in operation)
Replacing the engine oil		●	●	●	●	●	●	Every 250 hours
Replacing the oil filter element			●		●		●	Every 500 hours

Fuel System

Inspection/Maintenance Item	Daily	250 hours	500 hours	750 hours	1,000 hours	1,250 hours	1,500 hours	Remarks
Fuel leak	●							
Water removal from fuel	●							
Replacing the fuel filter element			●*1		●*1		●*1	Every 500 hours
Inspecting and cleaning the supply pump strainer			●		●		●	Every 500 hours
Replacing the electromagnetic pump filter (paper type)			●*1		●*1		●*1	Every 500 hours
Cleaning the electromagnetic pump filter (steel mesh type)			●*1		●*1		●*1	Every 500 hours
Inspecting and cleaning the injector								Every 3,000 hours

*1: Shorten the interval from every 500 hours to every 250 hours depending on the fuel management and refuel status.

Cooling System

Inspection/Maintenance Item	Daily	250 hours	500 hours	750 hours	1,000 hours	1,250 hours	1,500 hours	Remarks
Coolant quantity	●							Inspecting the reserve tank
Abnormal discoloration and contamination of coolant	●							
Coolant leak	●							
Radiator cap installation condition	●							As specified by the machine manufacturer
Inspecting (replacing) the fan belt	●		●		●		●	Deflection -When reused: 6.6 - 7.4 mm (0.26 - 0.29 in) -New belt: 4.2 - 5.0 mm (0.17 - 0.20 in) approx. **98 N** (10 kgf/**22 lb**)
Inspection using the coolant temperature gauge or monitor	●							75 - 90°C (167 - 194°F)
Replacing the coolant								Every 12 months**
Cleaning the coolant passage								Every 12 months
Cleaning the radiator exterior	●							As specified by the machine manufacturer
Inspection and maintenance the cooling system	●							As specified by the machine manufacturer
Inspecting the functionality of radiator cap*	●							As specified by the machine manufacturer

* : When performing inspection or maintenance, consult an Isuzu Distributor or the machine manufacturer.

** : When using long life coolant

Intake/Exhaust System

Inspection/Maintenance Item	Daily	250 hours	500 hours	750 hours	1,000 hours	1,250 hours	1,500 hours	Remarks
Replacing the air cleaner element								As specified by the machine manufacturer
Inspecting the air filter case for cracking and replacing it as necessary							●	Every 1,500 hours
Inspecting the turbocharger								Every 3,000 hours (blower cleaning as necessary)
Inspecting and cleaning the EGR valve								Every 3,000 hours
Inspecting and cleaning the EGR cooler							●	Every 1,500 hours

Electrical System

Inspection/Maintenance Item		Daily	250 hours	500 hours	750 hours	1,000 hours	1,250 hours	1,500 hours	Remarks
Inspecting the engine failure indication and liquid crystal display (LCD)		●							
Inspecting the battery fluid level		●							Adding distilled water (As specified by the machine manufacturer)
Cleaning the battery		●							
Charging status	Current meter	●							Immediately after start, + side (large) → (small) Normal operation, + side (small)
	Charge light	●							Off (in operation)
Measuring the specific gravity of battery fluid		●							As specified by the machine manufacturer
Inspecting and cleaning the starter and generator*						●			Every 1,000 hours
Inspecting the wiring and connections									As specified by the machine manufacturer
Preheating status		●							
Inspection the engine controller (ECM)									Every 3,000 hours

* : When performing inspection or maintenance, consult an Isuzu Distributor or the machine manufacturer.

Engine/Others

Inspection/Maintenance Item	Daily	250 hours	500 hours	750 hours	1,000 hours	1,250 hours	1,500 hours	Remarks
Inspecting and replacing the fuel oil pipe and coolant pipe								Every 24 months
Engine startability and abnormal noises	●							
Exhaust conditions	●							Exhaust color
Measuring the compression pressure*					●			Every 1,000 hours
Inspecting and adjusting the valve clearance*					●			Every 1,000 hours 0.15 mm (0.006 in) for both intake and exhaust (in cold engine)

* : When performing inspection or maintenance, consult an Isuzu Distributor or the machine manufacturer.

Recommended Lubricants and Diesel Fuels

It is extremely important to select correct lubricants and diesel fuels so that your engine demonstrates its full performance over the years.
Top up the lubricants in accordance with the Periodic Inspection and Maintenance List specified for your engine. Use the Isuzu genuine lubricants or those recommended in the list below. The lubricant change intervals specified in the Periodic Inspection and Maintenance List and the terms and conditions of the new engine warranty assume the use of the Isuzu genuine or Isuzu recommended lubricants listed below.

Selecting the Engine Oil

As for the engine oil, use the Isuzu genuine engine oil or those equivalent to the oils specified below. When planning to use any other engine oil, contact an Isuzu Distributor or the machine manufacturer.

LUBRICATION	GRADE		
	API	ACEA	JASO
Diesel engine crankcase (low ash oil)	CJ-4	E6 E9	DH-2

Engine Oil Viscosity

The viscosity of the engine oil (SAE) is an important factor determining the engine startability, performance, oil consumption, etc. When an inappropriate oil viscosity is selected, it may lead to a rapid wear, a failure such as a seizure or an accident, so depending on the air temperature, use different types properly in accordance with the table below.

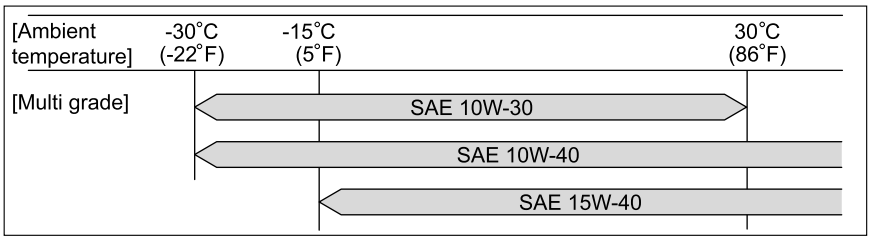

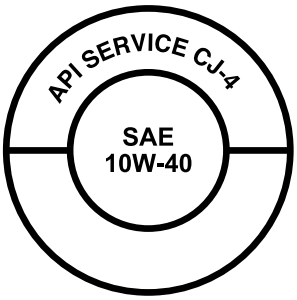

Oil Identification Logo (for United States and Canada Only)

A logo (symbol) is used on most oil containers to help you select the oil you should use. The top portion of the logo shows the oil quality by API designations such as CJ-4 or others. The center portion of the logo shows the SAE viscosity grade, such as SAE 10W-40. You should look for this logo on the oil container, and use only oil containing the logo.

Diesel Fuel Requirement

CAUTION

- Using fuel other than extra-low-sulfur diesel fuel (with a sulfur content of 10 ppm or lower for Japan and Europe, 15 ppm or lower for the United States and Canada) may have a harmful effect on the engine, possibly resulting in a breakdown. If a wrong type of fuel is filled in, drain it completely. It is dangerous to start the engine with the wrong type of fuel filled in because doing so may cause a fire or engine damage.
- Open the fuel cap slowly. If the cap is opened quickly, the fuel may spurt out.

ADVICE

- Only use fuels listed below. Do not use other fuels as they may adversely affect the engine.

DIESEL FUEL/APPLICABLE STANDARD	
JIS (JAPANESE INDUSTRIAL STANDARDS)	Based on K2204 Diesel Fuel Type 2 or Type 3 (SPL)*
DIN (DEUTSCHE INDUSTRIE NORMEN)	Based on EN590: 2009*
ASTM (AMERICAN SOCIETY FOR TESTING and MATERIALS)	Based on D975: 2009 NO.1-D S15 or NO.2-D S15**
CGSB (CANADA GENERAL STANDARDS BOARD)	Based on CGSB-3.517**
BS (BRITISH STANDARDS)	Based on EN590: 2009*

*: Sulfur content of 10 ppm or lower
**: Sulfur content of 15 ppm or lower

When Selecting Fuels (for United States and Canada Only)

Your engine is designed to use either Type "A" (1-D) or Type "B" (2-D) diesel fuel. For better fuel economy, use Type "B" (2-D) diesel fuel whenever possible. However, at temperatures below -7°C (20°F), Type "B" (2-D) fuel may pose operating problems.

Fuel Requirements (for United States and Canada Only)
→ Refer to Page 4-4

Refueling Using Fuels that Contain Biodiesel Fuel (Fatty Acid Methyl Esters (FAME)) (for Europe Only)

- You can use standard type diesel fuels that meet EN590. A standard type diesel fuel means the fuel that contains biodiesel fuel (FAME) which meets EN14214.
- Using diesel fuels that do not meet EN590, or using fuels that contain FAME which does not meet EN14214 may, in the worst case, cause a serious engine failure.
- Do not leave the diesel fuel that contains FAME unused in the engine for a long period of time. FAME contents may block up the fuel system, causing a serious engine failure.
- The engine is covered under the engine warranty given if the fuel that meets EN590 is used. However, if the engine is left unused for a long period of time, the characteristics of the fuel may change, causing a engine failure. The engine warranty is not applicable in such cases.

NOTE

- When changing from 0% FAME diesel to the fuel that contains FAME which meets EN590, there may be a negative impact on performance when pulling away and driving in general.

Refueling Using Fuels that Contain Biodiesel Fuel (for United States and Canada Only)

It is acceptable to use diesel fuel containing up to 5% biodiesel (B5), but the final blended fuel must meet the same specification, ASTM D975 (Grade Ultra Low Sulfur Diesel), as other fuels used in your engine, and the biodiesel used for making this fuel must meet the latest version of ASTM specification D6751. Biodiesel is produced from vegetable oils or animal fat that have been esterified to reduce the possibility of damage to your fuel system and engine. The use of un esterified bio-oils blended into diesel fuel at any concentration is not approved by Isuzu and could damage your fuel system and engine.

Biodiesel blends between B6 and B20 could cause damage to your engine and fuel system if these fuels do not meet strict quality standards. ASTM D7467 has been established to specify the properties of B6 to B20 biodiesel blends. However, field quality surveys have shown that many commercially available B6 to B20 blends do not meet this standard and in fact can be very damaging to your engine. If you plan to use biodiesel grades between B6 and B20, please contact your Isuzu Distributor or the machine manufacturer.

IN CASE OF EMERGENCY 6

- Cause of Failure and Corrective Action 6-2
- When the Battery Goes Flat 6-6
- When the Fuel Runs Out 6-7

Cause of Failure and Corrective Action

Dependably performing inspections and maintenance prevents faults. Make sure to perform periodic inspections and maintenance. Also, if a small problem is found, take an immediate action for it before it leads to a bigger problem.
If any of the failures listed below occurs, perform inspection and take action following the table.
If a repair cannot be performed by yourself, the corrective action shown in the table does not eliminate the problem or a failure location cannot be identified, contact the nearest Isuzu Distributor or the machine manufacturer.

ADVICE

- ◎ in the "Corrective Action" column indicates that the failure requires a repair or adjustment, so contact the nearest Isuzu Distributor or the machine manufacturer.

Symptom		Cause	Corrective Action	Reference Page
Engine does not start	Starter does not rotate or rotation is weak	Battery is running out	Charge or replace	6-6
		Disconnection, looseness, or corrosion of the battery terminals	Repair the corroded area, and then tighten securely	5-38
		Starter ground wire terminal detached, loose, or corroded	Repair the corroded area, and then tighten securely	—
		Engine oil viscosity is too high	Replace it with oil with appropriate viscosity	4-3
		Starter or electrical system faulty	◎	—
	Starter turns over	No fuel	Check that there is no fuel leakage and refuel	6-7
		Air intrusion in the fuel system	Remove the air	5-24
		Clogging of the fuel filter	Remove moisture and replace the element	5-23 5-25
		Fuel is frozen	Warm up the fuel pipe with hot water, or wait until the air temperature rises	—
		Failure of the supply pump	◎	—
		Failure of the engine control system	◎	—
		Preheating system faulty	◎	—
The engine starts, but stops immediately		Clogging of the fuel filter	Remove moisture and replace the element	5-23 5-25
		Clogging of the pre-fuel filter	Clean or replace the element	—
		Failure of the engine control system	◎	—
		Clogging of the air cleaner	Clean or replace the element	5-31
		Failure of the supply pump	◎	—
Engine revolution is unstable		Failure of the fuel system	◎	—
		Water or air intrusion in the fuel system	Drain water from fuel filter or bleed fuel system	5-23 5-24
		Failure of the engine control system	◎	—

Symptom	Cause	Corrective Action	Reference Page
The exhaust smoke is white	Insufficient warming-up	Perform warming-up	3-2
	Too much engine oil	Adjust to the appropriate oil amount	5-7
	Failure of the engine control system	◎	—
	Failure of the supply pump	◎	—
	Failure of the fuel system	◎	—
	Continuous idling for a long period (more than two hours)	Raise the engine speed and confirm that white smoke is not emitted	—
The exhaust smoke is black	Failure of the engine control system	◎	—
	Failure of the supply pump	◎	—
	Clogging of the air cleaner	Clean or replace the element	5-31
	Failure of the fuel system	◎	—
	Clogging of the exhaust system	◎	—
Overheat occurs	No coolant	Refill	—
	Front of the radiator is clogged with filth	Perform cleaning	5-21
	Reserve tank cap not fully tightened	Tighten it securely or replace the cap with a new one	—
	Coolant is dirty	Clean inside the radiator and replace the coolant	5-19
	Failure of the fan clutch	◎	—
	Reserve tank cap dirty or faulty	Clean or replace the reserve tank cap	—
	Excessive engine oil	Keep the oil at appropriate level	5-7
Oil pressure does not increase	Inappropriate engine oil viscosity	Replace it with oil with appropriate viscosity	4-3
	Amount of engine oil is insufficient	Refill	5-7
	Failure inside the engine	◎	—
	Failure of meters, lights or switches	◎	—

Symptom	Cause	Corrective Action	Reference Page
Engine does not have enough power	Clogging of the air cleaner	Clean the element	5-31
	Clogging of the fuel filter	Remove moisture and replace the element	5-23 5-25
	Clogging of the pre-fuel filter	Clean the element	—
	Failure of the engine control system	◎	—
	Failure of the engine	◎	—

When the Battery Goes Flat

Using the jumper cables (sold separately) and the battery of another machine, start the engine in the following sequence.

CAUTION

- Use a machine which is equipped with the same voltage battery as the one in the disabled machine as a rescue machine.
- The positive (+) terminal and the negative (-) terminal should not be put in contact with one another.
- When connecting the jumper cables, the clips should not be put in contact with one another.
- Ask an Isuzu Distributor or the machine manufacturer to recharge the battery.
- Do not disconnect a battery terminal with the engine running. Doing so could cause a failure in the electrical system.

1. Check the battery fluid level in the disabled machine.

Inspecting the Battery Fluid Level and Adding the Battery Fluid
→ Refer to Page 5-37

2. Use a machine that has the same battery voltage as a rescue machine.
3. Remove the battery cover and connect the jumper cables in the numbered sequence in the illustration.
4. After connecting the jumper cables, start the engine of the rescue machine.
5. Slightly raise the engine speed of the rescue machine, and start the engine of the disabled machine.
6. When the engine can be started, disconnect the jumper cables in the reverse sequence of the cable connection.

NOTE

- When it is difficult to start the engine in a cold area, first start the engine of the normal machine (rescue machine), wait for a few minutes, and then start the engine of the disabled machine.

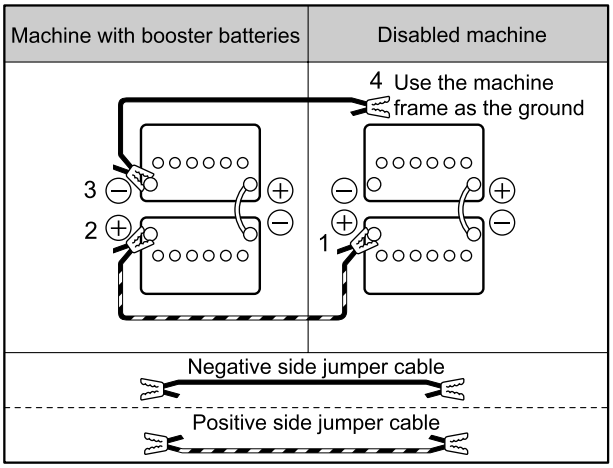

⚠ WARNING

- Check the battery fluid level before connecting the jumper cables. Using or charging the battery with the battery fluid level being below the lower limit may accelerate battery deterioration or induce heat generation or even explosion. Perform the work after adding the battery fluid.
- When connecting the jumper cable to the frame 4 of the disabled machine, it may create sparks. For this reason, if the cable is connected too close to the battery, the flammable gas which is generated from the battery may catch the sparks and explode, so choose a position as far away as possible.
- Do not let the positive (+) side of the jumper cable come in contact with the negative (-) side of jumper cable or the machine body.
- Keep flames away from it.

When the Fuel Runs Out

Since air enters in the fuel system when the fuel filter is replaced or the fuel runs out, simply supplying the fuel cannot start the engine. Remove the air from the fuel system.

Bleeding the Fuel System
→ Refer to Page 5-24

MAIN DATA 7

• Main Data and Specifications 7-2

Main Data and Specifications

Engine

AP-4JJ1T

Specifications	
4-cycle, Water-cooled type, In-line four-cylinder, Overhead cam shaft type, Turbocharger equipped engine	
Number of cylinders - Inner diameter x Travel mm (in)	4 - 95.4 × 104.9 (3.76 × 4.13)
Compression ratio* (to 1)	17.5
Displacement cc (cu. in)	2,999 (183)
Combustion chamber type	Direct injection type
Ignition order	1-3-4-2
Rated output (without fan)* kW (hp)/min^{-1}	52 (69.7) / 2,000
Maximum torque (without fan)* N·m (lb·ft)/min^{-1}	255 (188.1) / 1,500
Supercharging system	Turbocharger (IHI, RHF5)
Valve clearance mm (in)	Intake, Exhaust: 0.15 (0.006) in cold engine
Fuel type	Refer to page 2-3, 5-45
Injection pump type	Denso, Common rail type
Injector type	Porous type (electronically controlled)
Governor type*	Electronically controlled type
Engine oil capacity [Reference value]* **liters** (US gal./**Imp gal.**)	Approx. **9 - 13** (2.4 - 3.4 / **2.0 - 2.9**)
Coolant capacity (engine only) **liters** (US gal./**Imp gal.**)	Approx. **6** (1.6 / **1.3**)
Generator* volt/amp.	Hitachi 12 / 110
Starter motor* volt-kw	Denso 12 / 2.5

This specification is subject to change in part without notice.

*: Specification may vary depending on the machine, so refer to the specifications of the machine manufacturer.

A

Air Cleaner 5-31

B

Battery 5-35

Before Driving 2-2

C

Cause of Failure and Corrective Action 6-2

Cautions for Driving in Cold Regions and Season 4-2

Coolant 5-17

D

Daily (Pre-Driving) Inspection 5-4

Discarded Parts, Oils and Other Liquids 5-3

Driving 2-6

E

Electromagnetic Fuel Pump 5-29

Engine Conditions 5-5

Engine Number/Emission Label 1-3

Engine Oil 5-6

Engine Oil Filter 5-11

Exhaust Emission Regulation Related Parts 1-5

Exterior 0-6

F

Fan Belt 5-13

Fuel Filter 5-22

Fuel, Lubricant and Coolant 2-3

H

Handling the Engine with Turbocharger 3-9

I

Inspecting Components that Showed Abnormalities During Previous Operation 5-5

Inspection Method After the Engine Started 3-4

Isuzu Genuine Oils and Grease 5-3

Isuzu Genuine Parts 1-2

M

Main Data and Specifications 7-2

P

Periodic Inspection and Maintenance List 5-39

Precautions for Inspections and Adjustments 5-2

Preventing Engine Failure 2-11

R

Recommended Lubricants and Diesel Fuels 5-45

S

Starting the Engine 3-2

Staying Safe 2-10

Stopping the Engine 3-8

V

Valve Clearance/Others 5-32

W

Warranty 1-2

When the Battery Goes Flat 6-6

When the Fuel Runs Out 6-7

When to Visit an Isuzu Distributor 2-12

MEMO

MEMO

MEMO

MEMO

MEMO

MEMO

MEMO