CENTRALBIDDING
FROM CENTRAL AUCTION HOUSE

5000142136-Brown Avenue Drainage Improvements (Phase III) PW Project No. 2017-068-Dr (3) Department of Capital Projects

Jefferson Parish Government

PROJECT MANUAL

BROWN AVENUE DRAINAGE IMPROVEMENTS (PHASE III)
HARVEY, LOUISIANA
PARISH PROJECT NO. 2017-068-DR (3)
HDCA PROJECT 2017-09 (PHASE III)
BID NO. 50-142136

Prepared For:

Jefferson Parish
State of Louisiana

JEFFERSON PARISH GOVERNMENT
DEPARTMENT OF CAPITAL PROJECTS
1221 ELMWOOD PARK BOULEVARD, SUITE 906, JEFFERSON, LA 70123

Prepared By:

H. Davis Cole & Associates, LLC
Consulting Engineers

STATE OF LOUISIANA
MICHAEL P. D'ANGELO
License No. 25888
PROFESSIONAL ENGINEER
IN
CIVIL ENGINEERING

4/25/23

H. DAVIS COLE & ASSOCIATES, LLC
1340 POYDRAS STREET
SUITE 1850
NEW ORLEANS, LA 70112
Phone: (504) 836-2020
Fax: (504) 836-2010
www.hdaviscole.com

RELEASED FOR CONSTRUCTION
APRIL 2023

TABLE OF CONTENTS

ADVERTISEMENT FOR BIDS
BID NO. 50-00142136

Sealed Bids will be received electronically through our E-Procurement site at www.jeffparishbids.net until 2:00 p.m., **June 22, 2023** and publicly opened thereafter. At no charge, bidders may submit via Jefferson Parish's electronic procurement page by visiting www.jeffparishbids.net to register for this **free** site.

Bids will be accepted and received through Central Bidding until 2 p.m. The public bid opening will be held at the West Bank Purchasing Department at 200 Derbigny Street, Suite 4400, Gretna, LA 70053 beginning at 2:30 p.m. on each bid opening date for the following project:

Brown Avenue Drainage Improvements (Phase III)
PW Project No. 2017-068-Dr (3)
Department of Capital Projects

Purchases for this project shall be exempt from state sales and use tax according to La. R.S. 47:301(8)(c)(i). The successful bidder shall be granted the tax-exempt status of Jefferson Parish via Form R-1020, *Designation of Construction Contractor as Agent of a Governmental Entity Sales Tax Exemption Certificate*. Form R-1020 is distributed by the Louisiana Department of Revenue.

All bids must be in accordance with the contract documents on file with the Jefferson Parish Purchasing Department, Suite 4400, Jefferson Parish General Government Building, at 200 Derbigny Street, Gretna, Louisiana. **Late bids will not be accepted.**

Each Bid must be accompanied by an electronic bid surety bond in the amount equal to five percent (5%) of the total amount bid, and payable without condition to the owner. Vendors must submit an electronic bid bond through the respective online clearinghouse bond management system(s) as indicated in the electronic bid solicitation on Central Auction House. No scanned paper copies of any bid bond will be accepted as part of the electronic bid submission.

The drawings and specifications are on file and open for inspection in the Jefferson Parish Purchasing Department, Suite 4400, Jefferson Parish General Government Building, at 200 Derbigny Street, Gretna, Louisiana. A complete set of Contract Documents may be secured from **H. Davis Cole & Associates, LLC, 1340 Poydras Street, Suite 1850, New Orleans, LA 70112 (PHONE 504-836-2020, FAX 504-836-2010) by licensed contractors upon receipt of $125.00/set.** Deposit on the first set of documents furnished bona fide prime bidders will be fully refunded upon return of documents in good condition no later than ten (10) days after receipts of bids.

The successful bidder will be required to furnish a performance bond guaranteeing faithful performance of the contract. Companies providing the bonds shall comply with the requirements of LA-R.S. 38:2218 and R.S. 38:2219 as applicable.

The Jefferson Parish Council reserves the right to reject all bids and to reject bids for just cause, pursuant to the law. Jefferson Parish and its partners as the recipients of federal funds are fully committed to awarding a contract(s) to firm(s) that will provide high quality services and that are dedicated to diversity and to containing costs. Thus, Jefferson Parish strongly encourages the involvement of minority and/or woman-owned business enterprises (DBE's, including MBE's, WBE's and SBE's) to stimulate participation in procurement and assistance programs.

All prospective bidders are invited to attend the non-mandatory pre-bid conference which will be held at 9:00 a.m. on June 5, 2023 at the General Government Building located at 200 Derbigny Street-Suite 4400 Purchasing, Gretna, La 70053. However, failure to attend the pre-bid conference shall not relieve the bidder of responsibility for information discussed at the conference. Furthermore, failure to attend the pre-bid conference and inspection does not relieve the successful bidder from the necessity of furnishing materials or performing any work that may be required to complete the work in accordance with the specification with no additional cost to the owner.

Renny Simno
Director
Purchasing Department

Misty A. Camardelle
Assistant Director
Purchasing Department

ADV: The New Orleans Advocate: May 17, 24, & 31, 2023

For additional information, please visit the Purchasing Webpage at **http://purchasing.jeffparish.net** or you may call 504-364-2678.

PUBLIC WORKS BID INSTRUCTIONS

A. LOUISIANA CONTRACTOR'S LICENSE FOR THIS PROJECT

Must be in the following category:

_____

Each bidder shall comply with all rules and regulations of the Louisiana State Licensing Board for Contractors in accordance with existing state laws, and shall comply with the Licensing Requirements of Jefferson Parish Ordinance No. 13574, as amended a copy of which may be obtained from the Office of the Parish Clerk, Suite 6700, Jefferson Parish General Government Building, 200 Derbigny Street, Gretna, Louisiana 70053.

B. PROBABLE CONSTRUCTION RANGES AND PRICES

Range of the Probable Construction Cost for Base Bid: _____

Range of the Probable Construction Cost for Alternate No. 1: _____

Range of the Probable Construction Cost for Alternate No. 2: _____

Range of the Probable Construction Cost for Alternate No. 3: _____

Range of the Previous Contract Cap
(Public Work Maintenance Contract): _____

The purpose and intention of this invitation to bid is to afford all suppliers/contractors an equal opportunity to bid on construction, maintenance, repair, operating, services, supplies and/or equipment listed in this bid proposal. Jefferson Parish will accept one bid only from each vendor. Items bid on must meet or exceed specifications. Where brand names, make, manufacturer or stock numbers are specified, it is for the purpose of establishing certain minimum standards of quality. Bidders may submit for products of equal quality, style, type and character, provided brand names and stock numbers are specified. Complete product data may be required prior to award.

The price quoted for the work shall be stated in figures. In the event there is a difference in unit prices and totals, the unit prices shall prevail. In the event there is a difference in unit prices, written unit prices shall prevail over numerical unit prices.

The quantities listed on the bid form are prepared for comparison of bids and may be approximate. Payment to the contractor will be made in accordance with measurement and payment requirements for bid items and other requirements of the project specifications. Bid item quantities may be increased, decreased, or omitted as provided in the specifications.

Jefferson Parish requires all products to be new (current), and all work must be performed according to standard practices for the project. Unless otherwise specified, no after market parts will be accepted. Unless otherwise specified, all workmanship and materials must have at least a one (1) year guaranty, in writing, from the date of delivery/acceptance of the project.

C. METHODS OF BID SUBMISSION

All bids shall be submitted electronically through Jefferson Parish's eProcurement System online at no charge via Jefferson Parish's electronic procurement page by visiting www.jeffparishbids.net. Registration and use of this site are free to Jefferson Parish vendors. Additional instructions are included in the text box highlighting electronic procurement.

Only bids properly signed (see more below) will be accepted. NO LATE BIDS WILL BE ACCEPTED. The name of the bidder must be legibly shown. If the bidder is an individual, their name and address should be shown. If the bidder is an entity, the name of the person given the requisite authority to submit the bid on behalf of the entity shall be shown and the address of the entity's place of business should be shown.

Evidence of agency, corporate, limited liability or partnership authority of the person submitting and signing the bid is required for submission of bid. A copy of a corporate resolution or other signature authorization shall be required for submission of the bid. Failure to include a copy of the appropriate signature authorization will result in the rejection of the bid unless bidder has complied with LSA-R.S. 38:2212(B)(5). Photostatic or font signatures shall result in the bid being rejected. However, an electronic signature as defined in LSA-R.S. 9:2602(8) is acceptable. Signature must be a secured digital signature. A sample corporate resolution and sample certification of sole proprietorship can be downloaded from the Jefferson Parish Purchasing Department's website http://purchasing.jeffparish.net, or you may provide your own document.

D. TIMELINES

1. Prior to the closing time for receipt of scheduled bids

A bid may be withdrawn at any time prior to the scheduled closing time for receipt of bids, provided a request in writing, executed by the bidder or his duly authorized representative, is filed with the Parish prior to that time. When such a request is received, the bid will be returned to the bidder unopened. However, no bid can be modified, corrected or withdrawn after the time set for closing such bid, except as provided by LSA-R.S. 38:2214(C) & (D).

The Parish, its engineers, architects or anyone distributing plans and specifications for Parish public work projects, equal to or over the contract limit as defined in LA-R.S. 38:2212, shall furnish all prime bidders who request bid documents and who are properly licensed by the Louisiana State Licensing Board for Contractors with at least one set of complete bid documents. A deposit or fee may be charged on the documents as authorized by LA-R.S. 38:2212.

Addenda may be issued, as authorized by LA-R.S. 38:2212 (O). All formal Addenda require written acknowledgment on the bid form by the bidder. Failure to acknowledge an Addendum on the bid form shall cause the bid to be rejected. Jefferson Parish reserves the right to award the bid to the next lowest responsive and responsible bidder in this event.

Prior to submitting a bid each bidder shall visit the site of the proposed work and fully acquaint himself with all surface and subsurface conditions as they may exist so that he may fully understand the facilities, difficulties, and restrictions attending the execution of the work under this Contract. Bidders shall also thoroughly examine and be familiar with Drawings, Specifications, and Contract Documents. The failure or omission of any bidder to receive or examine any form, instrument, drawing, or document or to visit the site and acquaint himself with conditions there existing, shall in no way relieve any bidder from any obligation with respect to

his bid and the responsibility in the premises rests with him. Submission of a bid shall be considered prima facie evidence that the bidder has made such examination and is satisfied as to the conditions to be encountered in performing the work and as to requirements of the plans, project specifications, Resolution No. 141125, as amended, and contract forms.

Any pre-bid test and boring data in connection with subsurface conditions which have been completed by the Parish or its engineers and furnished to the bidder shall not be considered as fully representative of subsurface conditions existing throughout the area tested nor shall they in any way be binding upon the Parish, it being understood that said data is furnished the bidder for his convenience only and the bidder shall be solely responsible for conducting his own boring explorations he deems necessary in preparing his bid. Any prospective bidder wishing to conduct boring explorations on Parish property must obtain written permission from Jefferson Parish prior to such explorations.

No claims shall be made against the Parish for additional compensation due to unforeseen subsurface conditions arising during progress of the work and which might be in variance with the Parish's pre-bid boring data.

2. Post-closing time for receipt of scheduled bids

Except as where provided by law, bidder agrees that this bid shall be legally binding and may not be withdrawn for a period of forty-five (45) calendar days after the scheduled closing time for receiving bids. In the event the Parish issues the Letter of Award (copy of adopted resolution awarding bid by Jefferson Parish Council) during this period, the bid accepted shall continue to remain binding pending execution of the Contract.

Bidder agrees to execute the ensuing Contract and will deliver applicable Bonds to secure the faithful performance thereof.

The Parish of Jefferson reserves the right to cancel this contract for convenience by issuing a thirty (30) day written notice to contractor.

E. BID REVIEW AND AWARD

1. Rejection of Bids

a. Jefferson Parish may reject any and all bids for just cause in accordance with LA R.S. 38:2214(B). Just cause, for the purpose of the construction of public works, is defined, but is not limited to, the following circumstances:

(1) The public entity's unavailability of funds sufficient for the construction of the proposed public work.
(2) The failure of any bidder to submit a bid within an established threshold of the preconstruction estimates for that public work, as part of the bid specifications.
(3) A substantial change by the public entity prior to the award in the scope or design of the proposed public work.
(4) A determination by the public entity not to build the proposed public work within twelve months of the date for the public opening and reading of bids.
(5) The disqualification by the public entity of all bidders.

b. Additionally, bids may be considered irregular and be rejected for any of the following, but is not limited to the following circumstances:

(1) If the bid form is on a form other than that furnished by the Parish or if the form is altered or any part thereof is detached.
(2) If affidavits included in bid form and/or required by law are not returned with the bid or are not properly executed and notarized.
(3) If there are unauthorized additions, conditional or alternate bids or irregularities which alter the general terms and conditions, the plans or specifications, or make the bid incomplete, indefinite, or ambiguous as to its meaning.
(4) If the bidder adds provisions reserving the right to accept or reject the award or to enter into the contract pursuant to the award.
(5) If an owner or a principal officer of the bidding firm is an owner or a principal officer of a firm which has been declared by the Parish to be ineligible to bid.
(6) If the proposed bid security does not meet the requirements of Section J.
(7) If more than one proposal for the same work, services, materials or supplies is received from an individual, partner, firm, corporation, joint venture, other legal entity, or combination thereof under the same or a different name.
(8) The bid is not properly signed or the authority of the signature person submitting the bid is deemed insufficient or unacceptable.
(9) If the bidder does not possess the proper license(s) required as noted in the specifications.
(10) Any other reasons for rejection set forth by State or Parish laws, Ordinances or Resolutions.

c. In awarding contracts for materials and supplies, Jefferson Parish shall reject the lowest bid if received from a bidder domiciled in a Communist country, or if the materials or supplies are manufactured in a Communist country, including but not limited to China, North Korea and Vietnam, and to award the contract to the next lowest bidder. This Section shall not apply to any country having established trade relations agreements or approvals from the government of the United States. (LSA-R.S. 38:2212.3)

2. Disqualification of Bids

a. The causes for disqualification from consideration for award of a contract with Jefferson Parish are as follows (Jefferson Parish Code of Ordinances, Section 2-912):

(1) Conviction for commission of a criminal offense as an incident to obtaining or attempting to obtain a public or private contract or subcontract, or in the performance of such contract or subcontract;
(2) Conviction under state or federal statutes of embezzlement, theft, forgery, bribery, falsification or destruction of records, receiving stolen property, or any other offense indicating a lack of business integrity or business honesty which currently, seriously, and directly affects responsibility as a Parish contractor;
(3) Conviction under state or federal antitrust statutes arising out of the submission of bids or proposals;
(4) Violation of contract provisions, as set forth below, of a character which is regarded by the Purchasing Director or his designee for Jefferson Parish to be serious as to justify disqualification:
    i. Deliberate failure without good cause to perform in accordance with the specifications or within the time limit provided in the contract; or

ii. A recent record of failure to perform or of unsatisfactory performance in accordance with the terms of one or more contracts; provided that failure to perform or unsatisfactory performance caused by acts beyond the control of the contractor shall not be considered to be a basis for disqualification; or

iii. Failure to timely pay, without cause, a subcontractor for work performed under a construction contract as required under Section 2-976 in Chapter 2, Article VII, of the Jefferson Parish Code of Ordinances, provided disqualification on such basis shall not exceed a period of one (1) year from the deadline to pay the subcontractor.

(5) Any other cause the Purchasing Director determines to be so serious and compelling as to affect responsibility as a Parish contractor, including debarment by another governmental entity for any cause;

(6) Violation of the State Code of Ethics or the ethical standards set forth in the Jefferson Parish Code of Ordinances;

(7) Failure to secure and/or maintain necessary licenses and/or permits;

(8) Failure to comply with the Jefferson Parish Code of Ordinances and/or the Jefferson Parish Comprehensive Zoning Ordinance; or failure to comply with or meet bid specifications and/or failure to be a responsible bidder.

(9) A bid which is not responsive to, or does not meet bid specifications, will be rejected as being non-responsive, but that bidder will not be disqualified from future Parish bids, nor will that bidder be given a hearing pursuant to procedure listed below.

b. The procedures for disqualification from consideration for award of a contract with Jefferson Parish are set forth in Sec. 2- 912 (b).

3. Award of Contract

The award of the contract, if it be awarded, will be by the Parish to the lowest responsive and responsible bidder whose proposal shall have complied with all the bid requirements. The successful bidder will be notified via the e-Procurement site that his bid has been accepted. No contract shall be executed with any contractor until their certificates of insurance, performance bonds, labor and materials payment bonds, or any other bonds required are made satisfactory to the Parish.

Jefferson Parish reserves the right to award contracts or place orders on a lump sum or individual item basis, or such combination as shall, in its judgment, be in the best interest of Jefferson Parish. Every contract or order shall be awarded to the lowest responsible bidder, taking into consideration the conformity with the specifications, and the delivery and/or completion date.

Preference will be given to bidders requesting a preference in their bid in accordance with LSA-R.S. 38:2251-2261 for materials, supplies, and provisions, produced, manufactured or grown in Louisiana, quality being equal to articles offered by competitors outside the State of Louisiana, unless federal funding is directly spent by Jefferson Parish on this project.

The successful bidder shall execute the contract with the Parish in the form of the contract included in the specifications, a copy of which is annexed hereto, in such number of counterparts as the Parish may request within twelve (12) days after receipt of notice of award of the contract by the Parish. One copy of the executed contract with all documents forming a part thereof shall be filed at the expense of the contractor, with the Recorder of Mortgages in Jefferson Parish.

PROTESTS: Only those vendors that submit bids in response to this solicitation may protest any element of the procurement, in writing to the Director of the Purchasing Department. Written protest must be received within 48 hours of the release of the bid tabulation by the Purchasing Department. After consultation, the Parish Attorney's Office will then respond to protests in writing. (For more information, please see Chapter 2, Article VII, Division 2, Sec. 2-913 of the Jefferson Parish Code of Ordinances.)

Upon full execution of the contract and receiving a written notice to proceed, the bidder agrees that all work shall be completed as follows:

The work shall be substantially complete within ____ calendar days of the written notice to proceed and completed and shall be ready for final acceptance no more than 30 calendar days after substantial completion.

F. SALES TAX EXEMPTION

For this project, the contractor shall not pay any state or local sales or use taxes on materials and equipment which are affixed and made part of the immovable property of the project or which is permanently incorporated in the project (hereinafter referred to as "applicable materials and equipment"). All purchases of applicable materials or equipment shall be made by the contractor on behalf of and as the agent of Jefferson Parish (Parish), a political subdivision of the State of Louisiana. No state and local sales and use taxes are owed on applicable materials and equipment under the provisions of Act 1029 of the 1991 Regular Session – Louisiana Revised Statute 47:301(8)(c). Parish will furnish to contractor a certificate form which certifies that Parish is not required to pay such state or local sales and use taxes, and contractor shall furnish a copy of such certificate to all vendors or suppliers of the applicable materials and equipment, and report to Parish the amount of taxes not incurred.

G. LIQUIDATED DAMAGES

In accordance with Resolution No. 141125, as amended, Bidder agrees to pay, as liquidated damages, the sum of $_____ for: (1) each consecutive calendar day after the agreed date of substantial completion that the work remains substantially incomplete, and (2) each consecutive calendar day after the 30th day following the actual date of substantial completion that the work has not been finally completed.

In addition to, but not in lieu of the per diem liquidated damages, Parish shall also be entitled to recover from the contractor or the contractor's surety additional liquidated damages as detailed in Resolution No. 141125, as amended. These additional liquidated damages may include, but are not limited to the following, in the amounts and for each of the items identified in the Supplementary Conditions:

(1)	Extended Architectural and/or Engineering Fees	$_____/hour
(2)	Extended Resident Project Representative Fee	$_____/hour
(3)	Extended Construction Management Fees	$_____/day
(4)	Extended Parish's Overhead and Personnel Expenses	$_____/hour

(5) Parish's Other Costs Directly Related to the Delay in Completion Beyond the Contract Times.

Whenever contractor's work requires inspections in excess of the budgeted amount for inspection, the contractor shall reimburse the Parish for the additional costs incurred by the Parish attributable to inspection of the contracted project in excess of the budgeted amount for inspections.

The reasonable budget for such inspections is $_____. Resident Project Representative overtime rates shall be calculated at 1.2 times the hourly rate. The cost of inspection in excess of this budgeted amount shall be assessed against Contractor's progress payments, all in accordance with Louisiana Public Bid Law.

H. ETHICAL STANDARDS AND COOPERATION WITH THE OFFICE OF THE INSPECTOR GENERAL, INCLUDING CONFLICTS OF INTEREST

Vendor agrees by bid submission to comply with all provisions of Louisiana Law as well as compliance with the Jefferson Parish Code of Ordinances, Louisiana Code of Ethics, as published on http://ethics.la.gov and applicable Jefferson Parish ethical standards and Jefferson Parish Terms and Conditions.

Inspector General: It shall be the duty of every Parish officer, employee, department, agency, special district, board, and commission; and the duty of every contractor, subcontractor, and licensee of the Parish, and the duty of every applicant for certification of eligibility for a Parish contract or program, to cooperate with the Inspector General in any investigation, audit, inspection, performance review, or hearing pursuant to JPCO 2-155.10(19). Every Parish contract and every bid, proposal, application or solicitation for a Parish contract, and every application for certification of eligibility for a Parish contract or program shall contain a statement that the corporation, partnership, or person understands and will abide by all provisions of JPCO 2-155.10. By submitting a bid, Bidder acknowledges this and will abide by all provisions of the referenced JPCO.

Conflicts of Interest: Jefferson Parish adheres to the Louisiana Code of Governmental Ethics, contained in Louisiana Revised Statutes Annotated, R.S. 42:1101, et seq. Vendor/Proposer by this submission warrants that there are no "conflicts of interest" related to this procurement that would violate applicable Louisiana Law. Violation of the Louisiana Code of Governmental Ethics may result in rescission of contract, permit or licenses, and the imposition of fines and/or penalties, without contractual liability to the public in accordance with applicable law.

I. REQUIRED AFFIDAVITS

For convenience, all legally mandated affidavits have been combined into one form, entitled **Public Works Bid Affidavit**. All bidders must submit with their bid submission, a completed, signed and properly notarized affidavit in its original format and without alteration in order to be compliant and for the bid to be considered responsive. A scanned copy of the completed, signed and properly notarized affidavit may be submitted with the bid; however, the successful bidder must submit the original affidavit in its original format and without material alteration prior to, or at contract execution. Failure to comply will result in the bid submission being rejected as non-responsive. The Parish reserves the right to award bid to the next lowest responsive and responsible bidder in this event.

The person submitting the bid, and whose authority to submit has been evidenced on the Corporate Resolution is the proper party to execute the **Public Works Bid Affidavit.**

J. BID REQUIREMENTS (BID DOCUMENTS, SPECIFICATIONS, BONDS, W-9 AND PAYMENT INFO)

Bidders must review the bid specifications and include any required documentation including but not limited to the LA Public Works Uniform Bid Form, Bid Security, Corporate Resolution or written evidence of signature authority, and the Public Works Affidavit. Pursuant to LA R.S. 38:2212(B)(3)(b), bidders shall also be responsible for providing any other documentation as required. Please note that the payment and performance bonds must be supplied by the successful bidder at contract signing.

No oral interpretation will be made to any bidder as to the meaning of the drawings, specifications, or contract documents. Every request for such interpretation shall be made in writing and addressed and forwarded to the Engineer, Architect or person distributing plans and specifications. No inquiry received within five (5) days prior to the day fixed for opening of the bids will be given consideration. Every interpretation made to the bidder shall be in the form of an addendum to the specifications and shall be issued as authorized by LA-R.S. 38:2212(O).

All such addenda shall become a part of the contract documents. Failure of any bidder to receive any such interpretation shall not relieve any bidder from any obligation under his bid as submitted without modification.

The specifications and plans are complementary of each other and all work called for or reasonably implied by either shall be performed as if called for by both. In case of conflict between the requirements of the specifications and plans, the specifications shall take precedence. Figured dimensions shall take precedence over scale dimensions, and larger scale details shall take precedence over smaller scale details in the general work drawings.

All vendors submitting bids shall register as a Jefferson Parish vendor, if not already registered. Registration forms may be downloaded from http://purchasing.jeffparish.net and click on Vendor Information. Current W-9 forms with respective Tax Identification numbers and vendor applications may be submitted at any time; however, if your company is not registered and/or a current W-9 form is not on file, vendor registration is mandatory. Vendors may experience a delay in payment if your company is not a registered vendor with Jefferson Parish.

Bidders must comply with all provisions of this Notice, the Standard General Conditions of the Construction Contract and any special conditions and specifications contained herein, all of which are made part of this bid proposal. Resolution No. 141125, as amended, will be considered a part of the bid whether attached or not. A copy of these terms and resolutions may be obtained from the Office of the Parish Clerk, Suite 6700, Jefferson Parish General Government Building, 200 Derbigny Street, Gretna, Louisiana 70053. Bidders may also obtain a copy by visiting the Purchasing Department's webpage at http://purchasing.jeffparish.net and clicking on online forms.

Bid Security: Bidders shall provide bid security in the form of an electronic bid bond in the amount of five percent (5%) of the total bid price (Base Bid and any Alternates) (as per R.S. 38:2218). The Bid Security shall remain valid until the contract is executed or until final disposition is made of the bids submitted. Such security will become the property of the Parish in the event the successful bidder fails or refuses to execute the contract or fails to produce performance and payment bonds upon contract signing. Bids shall remain binding for at least forty-five (45) days after the date set for the Bid Opening. In the event the Parish issues the Letter of Award during this period, the bid

accepted shall continue to remain binding until the execution of contract. Jefferson Parish and the lowest responsible bidder, by mutual written consent, may agree to extend the deadline for award by one or more extensions of thirty (30) calendar days.

When submitting online, bidders must submit an electronic bid bond through the respective online clearinghouse bond management system(s) as indicated in the electronic bid solicitation on Central Auction House. No scanned paper copies of any bid bond will be accepted as part of the electronic bid submission.

Performance Bond: A performance bond is required in 100% of the contract amount and is due at the signing of the formal contract, unless another percentage is required in the bid specifications. In the event of a conflict between these instructions and the bid specifications, the bid specifications shall control.

Payment Bond: A payment bond is required in 100% of the contract amount and is due at the signing of the formal contract, unless another percentage is required in the bid specifications. In the event of a conflict between these instructions and the bid specifications, the bid specifications shall control.

To the extent permitted by law, the bond requirements as set forth herein are waived insofar as Community Development Housing Rehabilitation Construction Contracts are concerned for single family, owner-occupied dwellings. The Parish Attorney's Office will omit the requirements in connection with Community Development Housing Rehabilitation Construction Contracts for single family, owner-occupied dwellings.

K. INSURANCE REQUIREMENTS

All bidders must submit with bid submission a current (valid) insurance certificate evidencing required coverages. Failure to comply will cause the bid to be rejected. The current insurance certificate will be used for proof of insurance at time of evaluation. Thereafter, and prior to contract execution, the low bidder will be required to provide final insurance certificates to the Parish which shall name the **Jefferson Parish, its Districts, Departments and Agencies under the direction of the Parish President and the Parish Council as additional insureds regarding negligence by the contractor for the Commercial General Liability and the Comprehensive Automobile Liability policies. Additionally, said certificates should reflect the name of the Parish Department receiving goods and services and reference the respective Jefferson Parish bid number.**

JEFFERSON PARISH REQUIRED STANDARD INSURANCE

☒ **WORKER'S COMPENSATION INSURANCE**

As required by Louisiana State Statute, exception; Employer's Liability, Section B shall be $1,000,000 per occurrence when Work is to be over water and involves maritime exposures to cover all employees not covered under the State Worker's Compensation Act, otherwise this limit shall be no less than $500,000 per occurrence.

☒ **COMMERCIAL GENERAL LIABILITY**

Shall provide limits not less than the following: $1,000,000 Combined Single Limit per Occurrence for bodily injury and property damage.

☒ **COMPREHENSIVE AUTOMOBILE LIABILITY**

Bodily injury liability $1,000,000 each person; $1,000,000 each occurrence. Property Damage Liability $1,000,000 each occurrence.

UMBRELLA LIABILITY COVERAGE
An umbrella policy or excess may be used to meet minimum requirements.

FOR CONSTRUCTION AND RENOVATION PROJECTS:
The following are required if selected. Such insurance is due upon contract execution.

☐ **OWNER'S PROTECTIVE LIABILITY**

To be for the same limits of liability for bodily injury and property damage liability established for commercial general liability.

☐ **BUILDER'S RISK INSURANCE**

The contractor shall maintain Builder's Risk Insurance at his own expense to insure both the Parish of Jefferson and contractor as their interest may appear.

INSURANCE DEDUCTIBLES - The Parish Attorney with concurrence of the Director of Risk Management have waived the deductible section of the Terms and Conditions for all Invitations to Bid, until further notice.

L. INDEMNIFICATION

Bidder acknowledges that bidder recovered the cost of any required insurance in the contract price as required by LA R.S. 9:2780.1(I) and that bidder recovered any such cost for the purposes of insuring an obligation to indemnify Jefferson Parish, defend Jefferson Parish, or hold Jefferson Parish harmless and that bidder's indemnity liability is limited to the amount of the proceeds that are payable under the insurance policy or policies that bidder has obtained.

M. FAMILIARITY WITH LAWS AND ORDINANCES

Bidders shall familiarize themselves with and shall comply with all applicable Federal and State Laws, Parish/Municipal Ordinances, Resolutions, and the rules and regulations of all authorities having jurisdiction over construction of the project, which may directly or indirectly affect the work or its prosecution.

These laws and/or ordinances will be deemed to be included in the contract, the same as though herein written in full.

In case of conflict between the requirements of these specifications and any State and/or Federal Regulations or Laws, the State and/or Federal Regulations or Laws shall take precedence in all cases in which State and/or Federal Funding of the contract, in whole or in part, depends upon compliance with said State and/or Federal Regulations or Laws.

N. MISCELLANEOUS

The successful bidder may be required to furnish a statement of the origin, composition, and manufacture of materials to be used in construction of the work together with samples, which samples may be subjected to testing to determine their quality and fitness for the work, as specified.

Bidders are not to exclude from participation in, deny the benefits of, or subject to discrimination under any program or activity, any person in the United States on the grounds of race, color, national origin, sex or religion except that any exemption from such prohibition against discrimination on the basis of religion as provided in the Civil Rights Acts of 1964, or Title VI and VII of the Act of April 11, 1968 shall also apply, as amended; nor discriminate on the basis of age under the Age Discrimination Act of 1975, as amended; nor with respect to an otherwise qualified handicapped individual as provided in Section 504 of the Rehabilitation Act of 1973, as amended. This assurance includes compliance with the administrative requirements of the Revenue Sharing final handicapped discrimination provisions contained in Section 51.55 (c), (d), (e), and (k) (5) of the Regulations.

Non-negotiable contract terms include but are not limited to taxes, assignment of contract, audit of records, EEOC and ADA compliance, record retention, content of contract/order of precedence, contract changes, force majeure, governing law, including ethics statements, claims or controversies, and termination based on contingency of appropriation of funds, as applicable.

LOUISIANA UNIFORM PUBLIC WORK BID FORM

TO: **Jefferson Parish**
Purchasing Department
200 Derbigny Street, Suite 4400
Gretna, Louisiana 70053
(Owner to provide name and address of owner)

BID FOR: **Brown Avenue Drainage Improvements (Phase III)**
Parish Project 2017-068-DR (3)
Bid No. 50-142136
(Owner to provide name of project and other identifying information)

The undersigned bidder hereby declares and represents that she/he; a) has carefully examined and understands the Bidding Documents, b) has not received, relied on, or based his bid on any verbal instructions contrary to the Bidding Documents or any addenda, c) has personally inspected and is familiar with the project site, and hereby proposes to provide all labor, materials, tools, appliances and facilities as required to perform, in a workmanlike manner, all work and services for the construction and completion of the referenced project, all in strict accordance with the Bidding Documents prepared by: H. Davis Cole & Associates, LLC and dated: 5/1/23
(Owner to provide name of entity preparing bidding documents.)

Bidders must acknowledge all addenda. The Bidder acknowledges receipt of the following **ADDENDA:** (Enter the number the Designer has assigned to each of the addenda that the Bidder is acknowledging) Addendum 1 and addendum 2.

TOTAL BASE BID: For all work required by the Bidding Documents (including any and all unit prices designated "Base Bid"* but not alternates) the sum of:

One hundred and seventy five thousand Dollars ($ 175,00.00)

ALTERNATES: For any and all work required by the Bidding Documents for Alternates including any and all unit prices designated as alternates in the unit price description.

Alternate No. 1 *(Owner to provide description of alternate and state whether add or deduct))* for the lump sum of:

N/A Dollars ($ N/A)

Alternate No. 2 *(Owner to provide description of alternate and state whether add or deduct))* for the lump sum of:

N/A Dollars ($ N/A)

Alternate No. 3 *(Owner to provide description of alternate and state whether add or deduct))* for the lump sum of:

N/A Dollars ($ N/A)

NAME OF BIDDER: Garden Environments, INC. DBA Wolf Group Construction
ADDRESS OF BIDDER: 4433 Ligustrum Street 4433 Ligustrum Street Metairie, LA 70001
LOUISIANA CONTRACTOR'S LICENSE NUMBER: 59207
NAME OF AUTHORIZED SIGNATORY OF BIDDER: Ethan Vuljoin
TITLE OF AUTHORIZED SIGNATORY OF BIDDER: Owner
SIGNATURE OF AUTHORIZED SIGNATORY OF BIDDER:** Ethan J Vuljoin
DATE: 06/22/2023

THE FOLLOWING ITEMS ARE TO BE INCLUDED WITH THE SUBMISSION OF THIS LOUISIANA UNIFORM PUBLIC WORK BID FORM:

* The Unit Price Form shall be used if the contract includes unit prices. Otherwise it is not required and need not be included with the form. The number of unit prices that may be included is not limited and additional sheets may be included if needed.

** **A CORPORATE RESOLUTION OR WRITTEN EVIDENCE** of the authority of the person signing the bid for the public work as prescribed by LA R.S. 38:2212(B)(5).

BID SECURITY in the form of a bid bond, certified check or cashier's check as prescribed by LA RS 38:2218(A) is attached to and made a part of this bid.

LOUISIANA UNIFORM PUBLIC WORK BID FORM
UNIT PRICE FORM

TO: **Jefferson Parish**
Purchasing Department
200 Derbigny Street, Suite 4400
Gretna, Louisiana 70053
(Owner to provide name and address of owner)

BID FOR: **Brown Avenue Drainage Improvements (Phase III)**
Parish Project 2017-068-DR (3)
Bid No. 50-142136
(Owner to provide name of project and other identifying information)

UNIT PRICES: This form shall be used for any and all work required by the Bidding Documents and described as unit prices. Amounts shall be stated in figures and only in figures.

DESCRIPTION:	☒ Base Bid or ❑ Alt.# N/A - REMOVAL OF STRUCTURES & OBSTRUCTIONS			
REF. NO.	QUANTITY:	UNIT OF MEASURE:	UNIT PRICE	UNIT PRICE EXTENSION *(Quantity times Unit Price)*
201 (02)	1	LUMP SUM	25,000	25,000

DESCRIPTION:	☒ Base Bid or ❑ Alt.# N/A - TEMPORARY ENVIRONMENTAL CONTROLS			
REF. NO.	QUANTITY:	UNIT OF MEASURE:	UNIT PRICE	UNIT PRICE EXTENSION *(Quantity times Unit Price)*
204	1	LUMP SUM	10,000	10,000

DESCRIPTION:	☒ Base Bid or ❑ Alt.# N/A – TEMPORARY TRAFFIC CONTROL			
REF. NO.	QUANTITY:	UNIT OF MEASURE:	UNIT PRICE	UNIT PRICE EXTENSION *(Quantity times Unit Price)*
713	1	LUMP SUM	10,000	10,000

DESCRIPTION:	☒ Base Bid or ❑ Alt.# N/A - SEEDING			
REF. NO.	QUANTITY:	UNIT OF MEASURE:	UNIT PRICE	UNIT PRICE EXTENSION *(Quantity times Unit Price)*
717	1	LUMP SUM	5,000	5,000

DESCRIPTION:	☒ Base Bid or ❑ Alt.# N/A - FERTILIZER			
REF. NO.	QUANTITY:	UNIT OF MEASURE:	UNIT PRICE	UNIT PRICE EXTENSION *(Quantity times Unit Price)*
718	1	LUMP SUM	3,000	3,000

DESCRIPTION:	☒ Base Bid or ❑ Alt.# N/A - MOBILIZATION			
REF. NO.	QUANTITY:	UNIT OF MEASURE:	UNIT PRICE	UNIT PRICE EXTENSION *(Quantity times Unit Price)*
727	1	LUMP SUM	17,5000	17,5000

DESCRIPTION:	☒ Base Bid or ❑ Alt.# N/A - CONSTRUCTION LAYOUT AND SURVEYING			
REF. NO.	QUANTITY:	UNIT OF MEASURE:	UNIT PRICE	UNIT PRICE EXTENSION *(Quantity times Unit Price)*
740	1	LUMP SUM	10,000	10,000

DESCRIPTION:	☒ Base Bid or ❑ Alt.# N/A – FURNISH AND INSTALL REINFORCED CAST-IN-PLACE CONCRETE JUNCTION BOX TO ENCLOSE OPEN AREA BETWEEN EXISTING RCPA CULVERT AND EXISTING REINFORCED CONCRETE BOX CULVERT			
REF. NO.	QUANTITY:	UNIT OF MEASURE:	UNIT PRICE	UNIT PRICE EXTENSION *(Quantity times Unit Price)*
S-1	1	LUMP SUM	75,000	75,000

DESCRIPTION:	☒ Base Bid or ❑ Alt.# N/A – FILLING AND GRADING SITE TO DRAIN			
REF. NO.	QUANTITY:	UNIT OF MEASURE:	UNIT PRICE	UNIT PRICE EXTENSION *(Quantity times Unit Price)*
S-2	1	LUMP SUM	5,000	5,000

DESCRIPTION:	☒ Base Bid or ❑ Alt.# N/A – INITIAL INSTALLATION & FINAL REMOVAL OF TEMPORARY DAMS			
REF. NO.	QUANTITY:	UNIT OF MEASURE:	UNIT PRICE	UNIT PRICE EXTENSION *(Quantity times Unit Price)*
S-3	1	LUMP SUM	10,000	10,000

Wording for "DESCRIPTION" is to be provided by the Owner
All quantities are estimated. The contractor will be paid upon actual quantities as verified by Owner.

LOUISIANA UNIFORM PUBLIC WORK BID FORM
UNIT PRICE FORM

TO: **Jefferson Parish**
Purchasing Department
200 Derbigny Street, Suite 4400
Gretna, Louisiana 70053
(Owner to provide name and address of owner)

BID FOR: **Brown Avenue Drainage Improvements (Phase III)**
Parish Project 2017-068-DR (3)
Bid No. 50- 142136
(Owner to provide name of project and other identifying information)

UNIT PRICES: This form shall be used for any and all work required by the Bidding Documents and described as unit prices. Amounts shall be stated in figures and only in figures.

DESCRIPTION:	☒ Base Bid or ❑ Alt.# N/A – DAM REMOVAL & REPLACEMENT (EACH ADDITIONAL OCCURRENCE)			
REF. NO.	QUANTITY:	UNIT OF MEASURE:	UNIT PRICE	UNIT PRICE EXTENSION *(Quantity times Unit Price)*
S-4	1	EACH	22,000	22,000

Wording for "DESCRIPTION" is to be provided by the Owner
All quantities are estimated. The contractor will be paid upon actual quantities as verified by Owner.

Public Works Bid
Affidavit Instructions

- **Affidavit is supplied as a courtesy to Affiants, but it is the responsibility of the affiant to insure the affidavit they submit to Jefferson Parish complies, in both form and content, with federal, state and parish laws.**
- **Affidavit must be signed by an authorized representative of the entity or the affidavit will not be accepted.**
- **Affidavit must be notarized or the affidavit will not be accepted.**
- **Notary must sign name, print name, and include bar/notary number, or the affidavit will not be accepted.**
- **Affiant MUST select either A or B when required or the affidavit will not be accepted.**
- **Affiants who select choice A must include an attachment or the affidavit will not be accepted.**
- **If both choice A and B are selected, the affidavit will not be accepted.**
- **Affidavit marked N/A will not be accepted.**
- **It is the responsibility of the Affiant to submit a new affidavit if any additional campaign contributions are made after the affidavit is executed but prior to the time the council acts on the matter.**

Instruction sheet may be omitted when submitting the affidavit

Public Works Bid

AFFIDAVIT

STATE OF Louisiana

PARISH/COUNTY OF East Baton Rouge

BEFORE ME, the undersigned authority, personally came and appeared: Ethan Text Vuljoin, (Affiant) who after being by me duly sworn, deposed and said that he/she is the fully authorized Owner of Wolf Group Construction, INC. DBA Wolf Group Construction (Entity), the party who submitted a bid in response to Bid Number 50-142136, to the Parish of Jefferson.

Affiant further said:

Campaign Contribution Disclosures

(Choose A <u>or</u> B, if option A is indicated please include the required attachment):

Choice A _____ Attached hereto is a list of all campaign contributions, including the date and amount of each contribution, made to current or former elected officials of the Parish of Jefferson by Entity, Affiant, and/or officers, directors and owners, including employees, owning 25% or more of the Entity during the two-year period immediately preceding the date of this affidavit or the current term of the elected official, whichever is greater. Further, Entity, Affiant, and/or Entity Owners have not made any contributions to or in support of current or former members of the Jefferson Parish Council or the Jefferson Parish President through or in the name of another person or legal entity, either directly or indirectly.

Choice B X there are **<u>NO</u>** campaign contributions made which would require disclosure under Choice A of this section.

Affiant further said:

Debt Disclosures

(Choose A or B, if option A is indicated please include the required attachment):

Choice A _____ Attached hereto is a list of all debts owed by the affiant to any elected or appointed official of the Parish of Jefferson, and any and all debts owed by any elected or appointed official of the parish to the Affiant.

Choice B X _____ There are **NO** debts which would require disclosure under Choice A of this section.

Affiant further said:

That Affiant has employed no person, corporation, firm, association, or other organization, either directly or indirectly, to secure the public contract under which he received payment, other than persons regularly employed by the Affiant whose services in connection with the construction, alteration or demolition of the public building or project or in securing the public contract were in the regular course of their duties for Affiant; and

That no part of the contract price received by Affiant was paid or will be paid to any person, corporation, firm, association, or other organization for soliciting the contract, other than the payment of their normal compensation to persons regularly employed by the Affiant whose services in connection with the construction, alteration or demolition of the public building or project were in the regular course of their duties for Affiant.

Affiant further said:

Affiant personally has not been convicted of, nor has he/she entered into a plea of guilty or nolo contendere to any of the crimes or equivalent federal crimes listed below. No individual partner, incorporator, director, manager, officer, organizer, or member, who has a minimum of a ten percent ownership in the Bidding Entity, has been convicted of, or has entered a plea of guilty or nolo contendere to any of the crimes or equivalent federal crimes listed below. A conviction of or plea of guilty or nolo contendere to the following state crimes or equivalent federal crimes shall permanently bar any person or the bidding entity from bidding on public projects:

(a) Public bribery (R.S. 14:118)
(b) Corrupt influencing (R.S. 14:120)
(c) Extortion (R.S. 14:66)
(d) Money laundering (R.S. 14:230)

A conviction of or plea of guilty or nolo contendere to the following state crimes or equivalent federal crimes shall bar any person or the bidding entity from bidding on public projects for a period of five years from the date of conviction or from the date of the entrance of the plea of guilty or nolo contendere:

(a) Theft (R.S. 14:67)
(b) Identity Theft (R.S. 14:67, 16)
(c) Theft of a business record (R.S. 14:67.20)
(d) False accounting (R.S. 14:70)
(e) Issuing worthless checks (R.S. 14:71)
(f) Bank fraud (R.S. 14:71.1)
(g) Forgery (R.S. 14:72)
(h) Contractors; misapplication of payments (R.S. 14:202)
(i) Malfeasance in office (R.S. 14:134)

The five-year prohibition provided for in this section shall apply only if the crime was committed during the solicitation or execution of a contract or bid awarded pursuant to these provisions. If evidence is submitted substantiating that a false attestation has been made and the project must be readvertised or the contract cancelled, the awarded entity making the false attestation shall be responsible to the public entity for the costs of rebidding, additional costs due to increased costs of bids and any and all delay costs due to the rebid or cancellation of this project.

[*The remainder of this page is intentionally left blank.*]

Affiant further said:

(1) Entity is registered and participates in a status verification system to verify that all employees in the State of Louisiana are legal citizens of the United States or are legal aliens.

(2) Entity shall continue, during the term of the contract, to utilize a status verification system to verify the legal status of all new employees in the State of Louisiana.

(3) Entity shall require all subcontractors to submit to the Entity a sworn affidavit verifying compliance with statements (1) and (2).

Ethan J. Vuljoin
Signature of Affiant

Ethan Vuljoin
Printed Name of Affiant

SWORN AND SUBSCRIBED TO BEFORE ME
ON THE 22 DAY OF June, 2023.

Notary Public

Sarah Vuljoin
Printed Name of Notary

149128
Notary/Bar Roll Number

My commission expires At death.

R-1020I(11/04)

Designation of Construction Contractor as Agent of a Governmental Entity and Exemption Certificate

General Information

Purpose of the R-1020 Form: Agencies and instrumentalities of federal or Louisiana state or local government may designate a construction contractor as its authorized agent for the purpose of purchasing construction materials, leasing and renting tangible personal property, and purchasing taxable services. Form R-1020 serves as the documentation by which the government entity and contractor document the agency relationship to vendors of materials and services. It also serves as documentation that the contractor's purchases are sales tax exempt, and therefore serves as an exemption certificate, which the vendor must retain on file to support the deduction he will claim on his sales tax return. Effective 11-1-2004, the R-1032 exemption certificate will no longer be necessary.

Use of the R-1020 Form: The form must be signed by both parties, contractor and governmental entity. After signature, both the contractor/agent and the governmental entity must keep an original copy of the form on file, along with other documents that pertain to the construction project. (Effective 11-1-2004) Do not send a copy of the R-1020 form to the Louisiana Department of Revenue. Retain your copy of the original certificate on file. The contractor/agent must reproduce the original copy as needed to attach a copy to each purchase order for materials for the project. The reproduced copy will serve as the exemption certificate that will document the exempt sale of materials to the contractor/agent.

Subcontractors. A designated contractor may not re-designate his subcontractors as authorized agents for the governmental entity. Each subcontractor must obtain its own designation from the governmental entity.

Title to Property: Any materials purchased by the agent through the use of this certificate immediately become the property of the governmental entity upon delivery to the contractor/agent.

Restrictions as to Vendors: The governmental entity may choose to restrict the agent/contractor to making purchases from a pre-selected list of vendors and providers of services. This restriction, if applicable, must be incorporated into a contractual agreement between the governmental entity and the designated agent. If there are no vendor restrictions, the contractor/agent may use the R-1020 Exemption Certificate to make sales tax exempt purchases from any vendor.

R-1020 (4/12)

LDR
Contributing to a better quality of life

Designation of Construction Contractor as Agent of a Governmental Entity Sales Tax Exemption Certificate

_____, an agency of the United
Legal Name of Governmental Entity

States government, or an agency, board, commission, or instrumentality of the State of Louisiana or its political subdivisions, including parishes, municipalities and school boards, does hereby designate the following contractor as its agent for the purpose of making sales tax exempt purchases on behalf of the governmental body:

Name of Contractor Wolf Group Construction, INC. DBA Wolf Group Construction		
Address 4433 Ligustrum Street		
City Metairie	State LA	ZIP 70001

This designation of agency shall be effective for purchases of component construction materials, taxable services and leases and rentals of tangible personal property for the following named construction project:

Construction Project -Brown Avenue Drainage Improvements (Phase III) PW Project No. 2017-068-	Contract Number 5000142136

This designation and acceptance of agency is effective for the period

Beginning Date *(mm/dd/yyyy)* 06/22/2023	End Date *(mm/dd/yyyy)* 06/22/24

Purchases for the named project during this period by the designated contractor shall be considered as the legal equivalent of purchases directly by the governmental body. Any materials purchased by this agent shall immediately, upon the vendor's delivery to the agent, become the property of this government entity. This government entity, as principal, assumes direct liability to the vendor for the payment of any property, services, leases, or rentals made by this designated agent. This agreement does not void or supersede the obligations of any party created under any construction contract related to this project, including specifically any contractual obligation of the construction contractor to submit payment to the vendors of materials or services for the project.

This contractor-agent is not authorized to delegate this purchasing agency to others; separate designations of agency by this governmental entity are required for each contractor or sub-contractor who is to purchase on behalf of this governmental entity. The undersigned hereby certify that this designation is the entirety of the agency designation agreement between them. In order for a purchase for an eligible governmental entity through a designated agent to be eligible for sales tax exemption, the designation of agency must be made, accepted, and disclosed to the vendor before or at the time of the purchase transaction.

Designation of Agency		
Signature of Authorized Designator		Date *(mm/dd/yyyy)*
Name of Authorized Designator		
Name of Governmental Entity		
Address		
City	State	ZIP

Acceptance of Agency		
Signature of Contractor or Subcontractor Authorized Acceptor		Date *(mm/dd/yyyy)*
Name of Contractor's or Subcontractor's Acceptor Ethan Vuljoin		
Name of Contractor Garden Environments, INC. DBA Wolf Group Construction		
Address 4433 Ligustrum Street		
City Metairie	State LA	ZIP 70001

This designation of agency form, when properly executed by both the contractor and the governmental entity, shall serve as evidence of the sales tax exempt status that has been conferred onto the contractor. No other exemption certificate form is necessary to claim exemption from sales taxes. The agency agreement evidenced by this sales tax exemption certificate must be implemented at the time of contract execution with the governmental entity. The contract between the governmental entity and his agent must contain provisions to authenticate the conferment of agency.

CORPORATE RESOLUTION

EXCERPT FROM MINUTES OF MEETING OF THE BOARD OF DIRECTORS OF Garden Environments, INC. DBA Wolf Group Construction INCORPORATED.

AT THE MEETING OF DIRECTORS OF Garden Environments, INC. DBA Wolf Group Construction INCORPORATED, DULY NOTICED AND HELD ON june 22, 2023, A QUORUM BEING THERE PRESENT, ON MOTION DULY MADE AND SECONDED. IT WAS:

RESOLVED THAT Ethan Vuljoin, BE AND IS HEREBY APPOINTED, CONSTITUTED AND DESIGNATED AS AGENT AND ATTORNEY-IN-FACT OF THE CORPORATION WITH FULL POWER AND AUTHORITY TO ACT ON BEHALF OF THIS CORPORATION IN ALL NEGOTIATIONS, BIDDING, CONCERNS AND TRANSACTIONS WITH THE PARISH OF JEFFERSON OR ANY OF ITS AGENCIES, DEPARTMENTS, EMPLOYEES OR AGENTS, INCLUDING BUT NOT LIMITED TO, THE EXECUTION OF ALL BIDS, PAPERS, DOCUMENTS, AFFIDAVITS, BONDS, SURETIES, CONTRACTS AND ACTS AND TO RECEIVE ALL PURCHASE ORDERS AND NOTICES ISSUED PURSUANT TO THE PROVISIONS OF ANY SUCH BID OR CONTRACT, THIS CORPORATION HEREBY RATIFYING, APPROVING, CONFIRMING, AND ACCEPTING EACH AND EVERY SUCH ACT PERFORMED BY SAID AGENT AND ATTORNEY-IN-FACT.

I HEREBY CERTIFY THE FOREGOING TO BE A TRUE AND CORRECT COPY OF AN EXCERPT OF THE MINUTES OF THE ABOVE DATED MEETING OF THE BOARD OF DIRECTORS OF SAID CORPORATION, AND THE SAME HAS NOT BEEN REVOKED OR RESCINDED.

Peggy M Vuljoin

SECRETARY-TREASURER

06/22/23

DATE

Bid Bond

An Electronic Bid Bond must be submitted with this bid, through one of the respective clearing houses at www.jeffparish.net or www.centralbidding.com. To access the bonding companies on Central Bidding, hover over the “Central Bidding” link at the top of the page and select the “Bid Bonds” link.

The electronic bid bond number is to be placed in the required section listed on the standard envelope. Scanned copies of bid bonds will not be accepted with your submission.

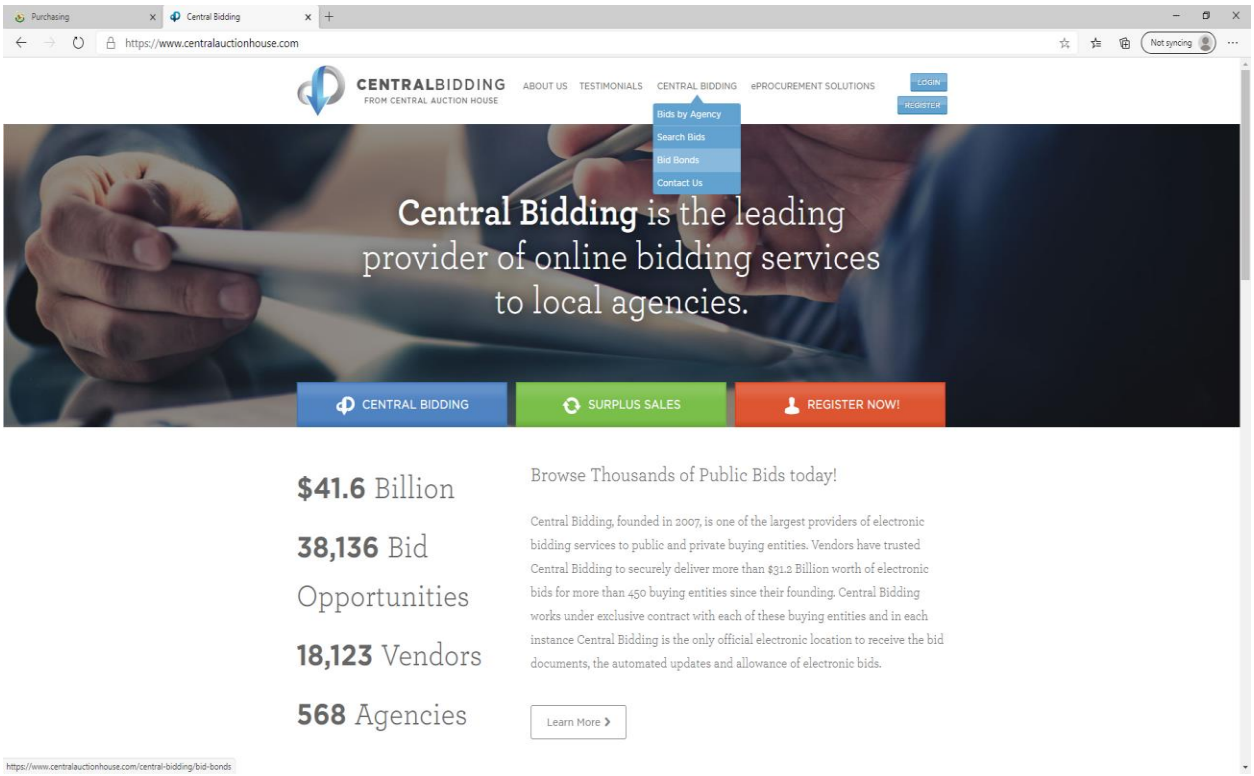

FORM OF PERFORMANCE BOND

KNOW ALL MEN BY THESE PRESENTS:

That we, _____, a _____,
(Name of Contractor)

hereinafter called "Principal", and _____, State
(Surety)

of _____, hereinafter called the "Surety", are held and firmly bound unto

_____, of _____,
(Owner) (City and State)

hereinafter called "Owner", in the penal sum of _____ Dollars ($) in lawful money of the United States, for the payment of which sum well and truly to be made, we bind ourselves, our heirs, executors, administrators, and successors, jointly and severally, firmly by these presents.

THE CONDITION OF THIS OBLIGATION is such that Whereas, the Principal entered

into a certain contract with the Owner, dated the _____ day of _____,

20__, a copy of which is hereto attached and made a part hereof for the construction of:

BROWN AVENUE DRAINAGE IMPROVEMENTS (PHASE III)
PARISH PROJECT NO. 2017-068-DR (3)

NOW, THEREFORE, if the Principal shall well, truly and faithfully perform its duties, all the undertakings, covenants, terms, conditions, and agreements of said contract during the original term thereof, and any extensions thereof which may be granted by the Owner, with or without notice to the Surety, and if he shall satisfy all claims and demands incurred under such contract, and shall fully indemnify and save harmless the Owner from all costs and damages which it may suffer by reason of failure to do so, and shall reimburse and repay the Owner all

outlay and expense which the Owner may incur in making good any default in connection with the construction of such work, and all insurance premiums on said work, whether by sub-contractor or otherwise, then this obligation shall be void; otherwise to remain in full force and effect.

PROVIDED, FURTHER, that the said Surety, for value received, hereby stipulates and agrees that no change, extension of time, alteration or addition to the terms of the contract or to the work to be performed thereunder or the specifications accompanying the same shall in any wise affect its obligation on this bond, and it does hereby waive notice of any such change, extension of time, alteration or addition to the terms of the contract or to the work or to the specifications.

PROVIDED, FURTHER, that no final settlement between the Owner and the Contractor shall abridge the right of any beneficiary hereunder, whose claim may be unsatisfied.

IN WITNESS WHEREOF, this instrument is executed in _____counterparts, each one of which shall be deemed an original, this the _____day of _____, 20__.

WITNESSES:

_____
(Principal)

_____ _____

_____ Title:_____

_____
(Surety)

_____ By:_____
(Attorney-in-fact)

_____ _____
(Address)

NOTE: Date of Bond must not be prior to date of Contract. If Contractor is Partnership, all partners should execute bond.

FORM OF LABOR AND MATERIALS PAYMENT BOND

KNOW ALL MEN BY THESE PRESENT: that

_____
(Name of Contractor)

_____
(Address of Contractor)

a _____hereinafter called Principal,

and _____
(Name of Surety)

_____
(Address of Surety)

hereinafter called Surety, all held and firmly bound unto the Parish of Jefferson hereinafter called Owner, in the penal sum of _____ Dollar ($) in lawful money of the United States, for the payment of which sum well and truly be made, we bind ourselves, successors, and assigns, jointly and severally, firmly by these presents.

THE CONDITION OF THIS OBLIGATION is such that whereas, the Principal entered into a certain contract with the Owner, dated the _____day of _____, 20__, a copy of which is hereto attached and made a part hereof for the construction of:

BROWN AVENUE DRAINAGE IMPROVEMENTS (PHASE III)
PARISH PROJECT NO. 2017-068-DR (3)

NOW, THEREFORE, if the Principal shall promptly make payment to all persons, firms, subcontractors, and corporations furnishing materials for or performing labor in the prosecution of the work provided for in such contract, and any authorized extension or modification thereof, including all amounts due for materials, lubricants, oil, gasoline, coal and coke, repairs on machinery, equipment and tools, consumed or used in connection with the construction of such work, and all insurance premiums on said work, and for all labor, performed in such work whether by subcontractor or otherwise, then this obligation shall be void; otherwise to remain in full force and effect.

FORM OF LABOR AND MATERIALS PAYMENT BOND (Continued)

PROVIDED, FURTHER, that the said Surety, for the value received, hereby stipulates and agrees that no change, extension of time, alteration or addition to the terms of the contract or to the work to be performed thereunder or to the specifications accompanying the same shall in anywise affect its obligation on this bond, and it does hereby waive notice of any such change, extension of time, alteration or addition to the terms of the contract or to the specifications.

PROVIDED, FURTHER, that no final settlement between Owner and the Contractor shall abridge the right of any beneficiary hereunder, whose claim may be unsatisfied.

IN WITNESS WHEREOF, this instrument is executed in _____counterparts, each of which shall be deemed an original, this ____day of _____, 20__.

ATTEST:

_____ _____
Principal

BY:_____

ADDRESS:_____

(SEAL) _____

_____
Witness as to Principal

_____
Address

ATTEST:

_____ _____
Surety

BY:_____

ADDRESS:_____

(SEAL) _____

_____

_____
Address

NOTE: DATE OF BOND must not be prior to date of Contract:
1. Correct Name of Contractor
2. A Corporation, A Partnership, or an Individual
3. Correct Name of Surety

This document has important legal consequences; consultation with an attorney is encouraged with respect to its use or modification. This document should be adapted to the particular circumstances of the contemplated Project and the controlling Laws and Regulations.

RESOLUTION 141125
STANDARD GENERAL CONDITIONS OF THE CONSTRUCTION CONTRACT

Prepared By

EJCDC®
ENGINEERS JOINT CONTRACT DOCUMENTS COMMITTEE

ACEC
AMERICAN COUNCIL OF ENGINEERING COMPANIES

ASCE
AMERICAN SOCIETY OF CIVIL ENGINEERS

NSPE®
NATIONAL SOCIETY OF PROFESSIONAL ENGINEERS

Endorsed By

CSI®
Building Knowledge
Improving Project Delivery

NUCA
We Dig America

National Society of Professional Engineers

1420 King Street, Alexandria, VA 22314-2794

(703) 684-2882

www.nspe.org

American Council of Engineering Companies

1015 15th Street N.W., Washington, DC 20005

(202) 347-7474

www.acec.org

American Society of Civil Engineers

1801 Alexander Bell Drive, Reston, VA 20191-4400

(800) 548-2723

www.asce.org

NOTE: EJCDC publications may be purchased at www.ejcdc.org, or from any of the sponsoring organizations above.

STANDARD GENERAL CONDITIONS OF THE CONSTRUCTION CONTRACT

TABLE OF CONTENTS

STANDARD GENERAL CONDITIONS OF THE CONSTRUCTION CONTRACT

ARTICLE 1—DEFINITIONS AND TERMINOLOGY

1.01 *Defined Terms*

A. Wherever used in the Bidding Requirements or Contract Documents, a term printed with initial capital letters, including the term's singular and plural forms, will have the meaning indicated in the definitions below. In addition to terms specifically defined, terms with initial capital letters in the Contract Documents include references to identified articles and paragraphs, and the titles of other documents or forms.

1. *Addenda*—Written or graphic instruments issued prior to the opening of Bids which clarify, correct, or change the Bidding Requirements or the proposed Contract Documents.

2. *Agreement*—The written instrument, executed by Owner and Contractor, that sets forth the Contract Price and Contract Times, identifies the parties and the Engineer, and designates the specific items that are Contract Documents.

3. *Application for Payment*—The document prepared by Contractor, in a form acceptable to Engineer, to request progress or final payments, and which is to be accompanied by such supporting documentation as is required by the Contract Documents.

4. *Bid*—The offer of a Bidder submitted on the prescribed form setting forth the prices for the Work to be performed.

5. *Bidder*—An individual or entity that submits a Bid to Owner.

6. *Bidding Documents*—The Bidding Requirements, the proposed Contract Documents, and all Addenda.

7. *Bidding Requirements*—The Advertisement or invitation to bid, Instructions to Bidders, Bid Bond or other Bid security, if any, the Bid Form, and the Bid with any attachments.

8. Bonds---Performance and payment bonds and other instruments of security.

9. *Change Order*—A document which is signed by Contractor and Owner and authorizes an addition, deletion, or revision in the Work or an adjustment in the Contract Price or the Contract Times, or other revision to the Contract, issued on or after the Effective Date of the Contract.

10. *Change Proposal*—A written request by Contractor, duly submitted in compliance with the procedural requirements set forth herein, seeking an adjustment in Contract Price or Contract Times; contesting an initial decision by Engineer concerning the requirements of the Contract Documents or the acceptability of Work under the Contract Documents; challenging a set-off against payments due; or seeking other relief with respect to the terms of the Contract.

11. *Claim*

    a. A demand or assertion by Owner directly to Contractor, duly submitted in compliance with the procedural requirements set forth herein, seeking an adjustment of Contract Price or Contract Times; contesting an initial decision by Engineer concerning the requirements of the Contract Documents or the acceptability of Work under the Contract Documents; contesting Engineer's decision regarding a Change Proposal; seeking resolution of a contractual issue that Engineer has declined to address; or seeking other relief with respect to the terms of the Contract.

    b. A demand or assertion by Contractor directly to Owner, duly submitted in compliance with the procedural requirements set forth herein, contesting Engineer's decision regarding a Change Proposal, or seeking resolution of a contractual issue that Engineer has declined to address.

    c. A demand or assertion by Owner or Contractor, duly submitted in compliance with the procedural requirements set forth herein, made pursuant to Paragraph 12.01.A.4, concerning disputes arising after Engineer has issued a recommendation of final payment.

    d. A demand for money or services by a third party is not a Claim.

12. *Constituent of Concern*—Asbestos (any material that contains more than one percent asbestos and is friable or is releasing asbestos fibers into the air above current action levels established by the United States Occupational Safety and Health Administration), petroleum (including crude oil or any fraction thereof which is liquid at standard conditions of temperature and pressure [60 degrees Fahrenheit and 14.7 pounds per square inch absolute], such as oil, petroleum, fuel oil, oil sludge, oil refuse, gasoline, kerosene, and oil mixed with other non-Hazardous Waste and crude oils), radioactive materials (source, special nuclear, or byproduct material as defined by the Atomic Energy Act of 1954 [42 USC Section 2011 et seq.] as amended from time to time), polychlorinated biphenyls (PCBs), lead-based paint (as defined by the HUD/EPA standard), hazardous waste (as defined in Section 1004 of the Solid Waste Disposal Act (42 USC Section 6903) as amended from time to time), and any substance, product, waste, or other material of any nature whatsoever that is or becomes listed, regulated, or addressed pursuant to Laws and Regulations regulating, relating to, or imposing liability or standards of conduct concerning, any hazardous, toxic, or dangerous waste, substance, or material.

13. *Contract*—The entire and integrated written contract between Owner and Contractor concerning the Work.

14. *Contract Documents*—Those items so designated in the Agreement, and which together comprise the Contract.

15. *Contract Price*—The money that Owner has agreed to pay Contractor for completion of the Work in accordance with the Contract Documents.

16. *Contract Times*—The number of days or the dates by which Contractor shall: (a) achieve Milestones, if any; (b) achieve Substantial Completion; and (c) complete the Work.

17. *Contractor*—The individual or entity with which Owner has contracted for performance of the Work.

18. *Cost of the Work*—See Paragraph 13.01 for definition.

19. *Drawings*—The part of the Contract that graphically shows the scope, extent, and character of the Work to be performed by Contractor.

20. *Effective Date of the Contract*—The date, indicated in the Agreement, on which the Contract becomes effective.

21. *Electronic Document*—Any Project-related correspondence, attachments to correspondence, data, documents, drawings, information, or graphics, including but not limited to Shop Drawings and other Submittals, that are in an electronic or digital format.

22. *Electronic Means*—Electronic mail (email), upload/download from a secure Project website, or other communications methods that allow: (a) the transmission or communication of Electronic Documents; (b) the documentation of transmissions, including sending and receipt; (c) printing of the transmitted Electronic Document by the recipient; (d) the storage and archiving of the Electronic Document by sender and recipient; and (e) the use by recipient of the Electronic Document for purposes permitted by this Contract. Electronic Means does not include the use of text messaging, or of Facebook, Twitter, Instagram, or similar social media services for transmission of Electronic Documents.

23. *Engineer*—The individual or entity named as such in the Agreement.

24. *Field Order*—A written order issued by Engineer which requires minor changes in the Work but does not change the Contract Price or the Contract Times.

25. <u>*Force Account*—Payment for directed construction work based on the cost of labor, equipment, materials furnished, overhead, and profit.</u>

26. *Hazardous Environmental Condition*—The presence at the Site of Constituents of Concern in such quantities or circumstances that may present a danger to persons or property exposed thereto.

    a. The presence at the Site of materials that are necessary for the execution of the Work, or that are to be incorporated into the Work, and that are controlled and contained pursuant to industry practices, Laws and Regulations, and the requirements of the Contract, is not a Hazardous Environmental Condition.

    b. The presence of Constituents of Concern that are to be removed or remediated as part of the Work is not a Hazardous Environmental Condition.

    c. The presence of Constituents of Concern as part of the routine, anticipated, and obvious working conditions at the Site, is not a Hazardous Environmental Condition.

27. *Laws and Regulations; Laws or Regulations*—Any and all applicable laws, statutes, rules, regulations, ordinances, codes, and binding decrees, resolutions, and orders of any and all governmental bodies, agencies, authorities, and courts having jurisdiction.

28. *Liens*—Charges, security interests, or encumbrances upon Contract-related funds, real property, or personal property.

29. *Milestone*—A principal event in the performance of the Work that the Contract requires Contractor to achieve by an intermediate completion date, or by a time prior to Substantial Completion of all the Work.

30. *Notice of Award*— ~~The written notice by Owner to a Bidder of Owner's acceptance of the Bid~~. The written notice by Owner to the apparent successful bidder stating that upon timely compliance by the apparent successful bidder with the conditions precedent listed therein, Owner will sign and deliver the Agreement to the successful bidder. However, the Notice of Award shall not be construed as an agreement, meeting of the minds, contract, or any other legal obligation between the Owner and Contractor. Until the Contractor receives a Notice to Proceed from the Owner, the Contractor has no right or remedy against the Owner.

31. *Notice to Proceed*—A written notice by Owner to Contractor fixing the date on which the Contract Times will commence to run and on which Contractor shall start to perform the Work.

32. *Owner*—The individual or entity with which Contractor has contracted regarding the Work, and which has agreed to pay Contractor for the performance of the Work, pursuant to the terms of the Contract.

33. *Partial Utilization*--Use by Owner of a substantially completed part of the Work for the purpose for which it is intended (or a related purpose) prior to Substantial Completion of all the Work.

34. *Progress Schedule*—A schedule, prepared and maintained by Contractor, describing the sequence and duration of the activities comprising Contractor's plan to accomplish the Work within the Contract Times.

35. *Project*—The total undertaking to be accomplished for Owner by engineers, contractors, and others, including planning, study, design, construction, testing, commissioning, and start-up, and of which the Work to be performed under the Contract Documents is a part.

36. *Resident Project Representative*—The authorized representative of Engineer assigned to assist Engineer at the Site. As used herein, the term Resident Project Representative (RPR) includes any assistants or field staff of Resident Project Representative.

37. *Samples*—Physical examples of materials, equipment, or workmanship that are representative of some portion of the Work and that establish the standards by which such portion of the Work will be judged.

38. *Schedule of Submittals*—A schedule, prepared and maintained by Contractor, of required submittals and the time requirements for Engineer's review of the submittals.

39. *Schedule of Values*—A schedule, prepared and maintained by Contractor, allocating portions of the Contract Price to various portions of the Work and used as the basis for reviewing Contractor's Applications for Payment.

40. *Shop Drawings*—All drawings, diagrams, illustrations, schedules, and other data or information that are specifically prepared or assembled by or for Contractor and submitted by Contractor to illustrate some portion of the Work. Shop Drawings, whether approved or not, are not Drawings and are not Contract Documents.

41. *Site*—Lands or areas indicated in the Contract Documents as being furnished by Owner upon which the Work is to be performed, including rights-of-way and easements, and such other lands or areas furnished by Owner which are designated for the use of Contractor.

42. *Specifications*—The part of the Contract that consists of written requirements for materials, equipment, systems, standards, and workmanship as applied to the Work, and certain administrative requirements and procedural matters applicable to the Work.

43. *Subcontractor*—An individual or entity having a direct contract with Contractor or with any other Subcontractor for the performance of a part of the Work.

44. *Submittal*—A written or graphic document, prepared by or for Contractor, which the Contract Documents require Contractor to submit to Engineer, or that is indicated as a Submittal in the Schedule of Submittals accepted by Engineer. Submittals may include Shop Drawings and Samples; schedules; product data; Owner-delegated designs; sustainable design information; information on special procedures; testing plans; results of tests and evaluations, source quality-control testing and inspections, and field or Site quality-control testing and inspections; warranties and certifications; Suppliers' instructions and reports; records of delivery of spare parts and tools; operations and maintenance data; Project photographic documentation; record documents; and other such documents required by the Contract Documents. Submittals, whether or not approved or accepted by Engineer, are not Contract Documents. Change Proposals, Change Orders, Claims, notices, Applications for Payment, and requests for interpretation or clarification are not Submittals.

45. *Substantial Completion*— The time at which the Work (or a specified part thereof) has progressed to the point where, in the opinion of Engineer, <u>as evidenced by Engineer's issued and signed final Certificate of Substantial Completion as provided in Paragraph 15.03.C and confirmed by Owner pursuant to a resolution adopted by the Jefferson Parish Council as provided in Paragraph 15.03.G</u>, the Work (or a specified part thereof) is sufficiently complete, in accordance with the Contract Documents, so that the Work (or a specified part thereof) can be utilized for the purposes for which it is intended. The terms "substantially complete" and "substantially completed" as applied to all or part of the Work refer to Substantial Completion of such Work.

46. *Successful Bidder*—The Bidder to which the Owner makes an award of contract.

47. *Supplementary Conditions*—The part of the Contract that amends or supplements these General Conditions.

48. *Supplier*—A manufacturer, fabricator, supplier, distributor, or vendor having a direct contract with Contractor or with any Subcontractor to furnish materials or equipment to be incorporated in the Work by Contractor or a Subcontractor.

49. *Technical Data*

    a. Those items expressly identified as Technical Data in the Supplementary Conditions, with respect to either (1) existing subsurface conditions at or adjacent to the Site, or existing physical conditions at or adjacent to the Site including existing surface or subsurface structures (except Underground Facilities) or (2) Hazardous Environmental Conditions at the Site.

    b. If no such express identifications of Technical Data have been made with respect to conditions at the Site, then Technical Data is defined, with respect to conditions at the Site under Paragraphs 5.03, 5.04, and 5.06, as the data contained in boring logs, recorded measurements of subsurface water levels, assessments of the condition of subsurface facilities, laboratory test results, and other factual, objective information

regarding conditions at the Site that are set forth in any geotechnical, environmental, or other Site or facilities conditions report prepared for the Project and made available to Contractor.

c. Information and data regarding the presence or location of Underground Facilities are not intended to be categorized, identified, or defined as Technical Data, and instead Underground Facilities are shown or indicated on the Drawings.

50. *Underground Facilities*—All active or not-in-service underground lines, pipelines, conduits, ducts, encasements, cables, wires, manholes, vaults, tanks, tunnels, or other such facilities or systems at the Site, including but not limited to those facilities or systems that produce, transmit, distribute, or convey telephone or other communications, cable television, fiber optic transmissions, power, electricity, light, heat, gases, oil, crude oil products, liquid petroleum products, water, steam, waste, wastewater, storm water, other liquids or chemicals, or traffic or other control systems. An abandoned facility or system is not an Underground Facility.

51. *Unit Price Work*—Work to be paid for on the basis of unit prices.

52. *Work*—The entire construction or the various separately identifiable parts thereof required to be provided under the Contract Documents. Work includes and is the result of performing or providing all labor, services, and documentation necessary to produce such construction; furnishing, installing, and incorporating all materials and equipment into such construction; and may include related services such as testing, start-up, and commissioning, all as required by the Contract Documents.

53. *Work Change Directive*—A written directive to Contractor issued on or after the Effective Date of the Contract, signed by Owner and recommended by Engineer, ordering an addition, deletion, or revision in the Work, <u>or responding to differing or unforeseen subsurface or physical conditions under which the Work is to be performed or to emergencies. A Work Change Directive will not change the Contract Price or the Contract Times but is evidence that the parties expect that the change ordered or documented by a Work Change Directive will be incorporated in a subsequently issued Change Order following negotiations by the parties as to its effect, if any, on the Contract Price or Contract Times. Contractor shall not be entitled to any change in the Contract Price or the Contract Times related to a Work Change Directive unless and until a valid Change Order is approved by the Jefferson Parish Council</u>.

1.02 *Terminology*

A. The words and terms discussed in Paragraphs 1.02.B, C, D, and E are not defined terms that require initial capital letters, but, when used in the Bidding Requirements or Contract Documents, have the indicated meaning.

B. *Intent of Certain Terms or Adjectives*: The Contract Documents include the terms "as allowed," "as approved," "as ordered," "as directed" or terms of like effect or import to authorize an exercise of professional judgment by Engineer. In addition, the adjectives "reasonable," "suitable," "acceptable," "proper," "satisfactory," or adjectives of like effect or import are used to describe an action or determination of Engineer as to the Work. It is intended that such exercise of professional judgment, action, or determination will be solely to evaluate, in general, the Work for compliance with the information in the Contract Documents and with the design concept of the Project as a functioning whole as shown or indicated in the Contract

Documents (unless there is a specific statement indicating otherwise). The use of any such term or adjective is not intended to and shall not be effective to assign to Engineer any duty or authority to supervise or direct the performance of the Work, or any duty or authority to undertake responsibility contrary to the provisions of Article 10 or any other provision of the Contract Documents.

C. *Day*: The word "day" means a calendar day of 24 hours measured from midnight to the next midnight.

D. *Defective*: The word "defective," when modifying the word "Work," refers to Work that is unsatisfactory, faulty, or deficient in that it:

1. does not conform to the Contract Documents;
2. does not meet the requirements of any applicable inspection, reference standard, test, or approval referred to in the Contract Documents; or
3. has been damaged prior to Engineer's recommendation of final payment (unless responsibility for the protection thereof has been assumed by Owner at Substantial Completion in accordance with Paragraph 15.03 or Paragraph 15.04).

E. *Furnish, Install, Perform, Provide*

1. The word "furnish," when used in connection with services, materials, or equipment, means to supply and deliver said services, materials, or equipment to the Site (or some other specified location) ready for use or installation and in usable or operable condition.
2. The word "install," when used in connection with services, materials, or equipment, means to put into use or place in final position said services, materials, or equipment complete and ready for intended use.
3. The words "perform" or "provide," when used in connection with services, materials, or equipment, means to furnish and install said services, materials, or equipment complete and ready for intended use.
4. If the Contract Documents establish an obligation of Contractor with respect to specific services, materials, or equipment, but do not expressly use any of the four words "furnish," "install," "perform," or "provide," then Contractor shall furnish and install said services, materials, or equipment complete and ready for intended use.

F. *Contract Price or Contract Times*: References to a change in "Contract Price or Contract Times" or "Contract Times or Contract Price" or similar, indicate that such change applies to (1) Contract Price, (2) Contract Times, or (3) both Contract Price and Contract Times, as warranted, even if the term "or both" is not expressed.

G. Unless stated otherwise in the Contract Documents, words or phrases that have a well-known technical or construction industry or trade meaning are used in the Contract Documents in accordance with such recognized meaning.

ARTICLE 2—PRELIMINARY MATTERS

2.01 *Delivery of Performance and Payment Bonds; Evidence of Insurance; Recordation of Contract Documents*

A. *Performance and Payment Bonds*: When Contractor delivers the signed counterparts of the Agreement to Owner, Contractor shall also deliver to Owner the performance bond and payment bond (if the Contract requires Contractor to furnish such bonds).

B. *Evidence of Contractor's Insurance*: When Contractor delivers the signed counterparts of the Agreement to Owner, Contractor shall also deliver to Owner, with copies to each additional insured (as identified in the Contract), the certificates, endorsements, and other evidence of insurance required to be provided by Contractor in accordance with Article 6, except to the extent the Supplementary Conditions expressly establish other dates for delivery of specific insurance policies.

~~C. *Evidence of Owner's Insurance*: After receipt of the signed counterparts of the Agreement and all required bonds and insurance documentation, Owner shall promptly deliver to Contractor, with copies to each additional insured (as identified in the Contract), the certificates and other evidence of insurance required to be provided by Owner under Article 6~~.

C. Contractor shall not start any Work at the Site unless and until Contractor has in place and in full force and effect all of the insurance and Bonds which the Contractor is required to obtain by the Agreement, the Contract, or the Supplementary Conditions. Any delay in obtaining confirmation of the existence of the insurance, Bonds, and other security required by this Contract and compliance with the terms of the Contract therefor shall be counted as workdays if the start of Work is delayed beyond the time set forth in paragraphs 4.01 and 4.02. The Contract shall not be in force or binding on Owner until satisfactory Bonds and insurance have been provided in accordance with the Contract Documents.

D. In accordance with the Instructions to Bidders, one complete copy of the executed Contract Documents, including Specifications and Drawings, shall be filed with the Clerk of Court and Ex-Officio Recorder of Mortgages for Jefferson Parish promptly, but in any event before starting any Work, at Contractor's expense, which expense may be deducted from any application for payment if not paid for directly by Contractor.

2.02 *Copies of Documents*

A. Owner shall furnish to Contractor one ~~four~~ printed copy ~~copies~~ of the Contract (including one fully signed counterpart of the Agreement), and one copy in electronic portable document format (PDF). Additional printed copies will be furnished upon request at the cost of reproduction.

~~B. Owner shall maintain and safeguard at least one original printed record version of the Contract, including Drawings and Specifications signed and sealed by Engineer and other design professionals. Owner shall make such original printed record version of the Contract available to Contractor for review. Owner may delegate the responsibilities under this provision to Engineer~~.

2.03 *Before Starting Construction*

A. *Preliminary Schedules*: Within 10 days after the Effective Date of the Contract (or as otherwise required by the Contract Documents), Contractor shall submit to Engineer for timely review:

1. a preliminary Progress Schedule indicating the times (numbers of days or dates) for starting and completing the various stages of the Work, including any Milestones specified in the Contract;

2. a preliminary Schedule of Submittals; and

3. a preliminary Schedule of Values for all of the Work which includes quantities and prices of items which when added together equal the Contract Price and subdivides the Work into component parts in sufficient detail to serve as the basis for progress payments during performance of the Work. Such prices will include an appropriate amount of overhead and profit applicable to each item of Work.

4. The construction schedule shall be in a detailed precedence-style critical path method (CPM) or prima vera type format satisfactory to the Owner and the Engineer, and shall also: (1) provide a graphic representation of all activities and events that will occur during the performance of the Work; (2) identify each phase of construction and occupancy; and (3) set forth dates that are critical in insuring the timely and orderly completion of the Work in accordance with the requirements of the Contract Documents (hereinafter referred to as Milestone Dates). Upon review and acceptance by the Owner and the Engineer of the Milestone Dates, the construction schedule shall be deemed part of the Contract Documents and attached to the agreement as Exhibit. If not accepted, the construction schedule shall be promptly revised by the Contractor in accordance with the recommendations of the Owner and the Engineer and resubmitted for acceptance.

2.04 *Preconstruction Conference; Designation of Authorized Representatives*

A. Before any Work at the Site is started, a conference attended by Owner, Contractor, Engineer, and others as appropriate will be held to establish a working understanding among the parties as to the Work, and to discuss the schedules referred to in Paragraph 2.03.A, procedures for handling Shop Drawings, Samples, and other Submittals, processing Applications for Payment, electronic or digital transmittals, and maintaining required records.

B. At this conference Owner and Contractor each shall designate, in writing, a specific individual to act as its authorized representative with respect to the services and responsibilities under the Contract. Such individuals shall have the authority to transmit and receive information, render decisions relative to the Contract, and otherwise act on behalf of each respective party.

2.05 *Acceptance of Schedules*

A. At least 10 days before submission of the first Application for Payment a conference, attended by Contractor, Engineer, and others as appropriate, will be held to review the schedules submitted in accordance with Paragraph 2.03.A. No progress payment will be made to Contractor until acceptable schedules are submitted to Engineer.

1. The Progress Schedule will be acceptable to Engineer if it provides an orderly progression of the Work to completion within the Contract Times. Such acceptance will not impose on Engineer responsibility for the Progress Schedule, for sequencing, scheduling, or

progress of the Work, nor interfere with or relieve Contractor from Contractor's full responsibility therefor.

2. Contractor's Schedule of Submittals will be acceptable to Engineer if it provides a workable arrangement for reviewing and processing the required submittals.

3. Contractor's Schedule of Values will be acceptable to Engineer as to form and substance if it provides a reasonable allocation of the Contract Price to the component parts of the Work.

4. If a schedule is not acceptable, Contractor will have an additional 10 days to revise and resubmit the schedule.

2.06 *Electronic Transmittals*

A. Except as otherwise stated elsewhere in the Contract, the Owner, Engineer, and Contractor may send, and shall accept, Electronic Documents transmitted by Electronic Means.

B. If the Contract does not establish protocols for Electronic Means, then Owner, Engineer, and Contractor shall jointly develop such protocols.

C. Subject to any governing protocols for Electronic Means, when transmitting Electronic Documents by Electronic Means, the transmitting party makes no representations as to long-term compatibility, usability, or readability of the Electronic Documents resulting from the recipient's use of software application packages, operating systems, or computer hardware differing from those used in the drafting or transmittal of the Electronic Documents.

ARTICLE 3—CONTRACT DOCUMENTS: INTENT, REQUIREMENTS, REUSE

3.01 *Intent*

A. The Contract Documents are complementary; what is required by one Contract Document is as binding as if required by all.

B. It is the intent of the Contract Documents to describe a functionally complete Project (or part thereof) to be constructed in accordance with the Contract Documents. In case of discrepancy, the following order of precedence will apply:

1. Special Provisions Section as included in the Specifications

2. Drawings

3. Supplementary Conditions

4. Standard Specifications of Jefferson Parish as either included or referenced in the Specifications

5. Standard Plans of Jefferson Parish as either included or referenced in the Specifications

Calculated dimensions will govern over scaled dimensions.

Contractor shall take no advantage of any error or omission in the Contract Documents. If Contractor discovers such an error or omission, Contractor shall immediately notify Engineer. Engineer will then make such corrections and interpretations as deemed necessary to fulfil the intent of the Contract Documents.

C. Unless otherwise stated in the Contract Documents, if there is a discrepancy between the electronic versions of the Contract Documents (including any printed copies derived from such electronic versions) and the printed record version, the printed record version will govern.

D. The Contract supersedes prior negotiations, representations, and agreements, whether written or oral.

E Engineer will issue clarifications and interpretations of the Contract Documents as provided herein.

F. Any provision or part of the Contract Documents held to be void or unenforceable under any Law or Regulation will be deemed stricken, and all remaining provisions will continue to be valid and binding upon Owner and Contractor, which agree that the Contract Documents will be reformed to replace such stricken provision or part thereof with a valid and enforceable provision that comes as close as possible to expressing the intention of the stricken provision.

G. Nothing in the Contract Documents creates:

1. any contractual relationship between Owner or Engineer and any Subcontractor, Supplier, or other individual or entity performing or furnishing any of the Work, for the benefit of such Subcontractor, Supplier, or other individual or entity; or

2. any obligation on the part of Owner or Engineer to pay or to see to the payment of any money due any such Subcontractor, Supplier, or other individual or entity, except as may otherwise be required by Laws and Regulations.

H. Owner makes no warranties, express or implied, with respect to the fitness of the Drawings or Specifications prepared by the Engineer or any other person, and Contractor waives any claims against Owner arising out of any implied or express warranties of the fitness of the Drawings or Specifications for their intended purpose.

3.02 *Reference Standards*

A. *Standards Specifications, Codes, Laws, and Regulations*

1. Reference in the Contract Documents to standard specifications, manuals, reference standards, or codes of any technical society, organization, or association, or to Laws or Regulations, whether such reference be specific or by implication, means the standard specification, manual, reference standard, code, or Laws or Regulations in effect at the time of opening of Bids (or on the Effective Date of the Contract if there were no Bids), except as may be otherwise specifically stated in the Contract Documents.

2. No provision of any such standard, specification, manual, reference standard, or code, and no instruction of a Supplier, will be effective to change the duties or responsibilities of Owner, Contractor, or Engineer from those set forth in the part of the Contract Documents prepared by or for Engineer. No such provision or instruction shall be effective to assign to Owner or Engineer any duty or authority to supervise or direct the performance of the Work, or any duty or authority to undertake responsibility inconsistent with the provisions of the part of the Contract Documents prepared by or for Engineer.

3.03 *Reporting and Resolving Discrepancies*

A. *Reporting Discrepancies*

1. *Contractor's Verification of Figures and Field Measurements*: Before undertaking each part of the Work, Contractor shall carefully study the Contract Documents, and check and verify pertinent figures and dimensions therein, particularly with respect to applicable field measurements. Contractor shall promptly report in writing to Engineer any conflict, error, ambiguity, or discrepancy that Contractor discovers, or has actual knowledge of, and shall not proceed with any Work affected thereby until the conflict, error, ambiguity, or discrepancy is resolved by a clarification or interpretation by Engineer, or by an amendment or supplement to the Contract issued pursuant to Paragraph 11.01.

   The grades, elevations, dimensions, locations, and field measurements or any drawings or specifications issued ~~by the Engineer~~, or the Work installed by other contractors, are not guaranteed by the Engineer or the Owner. Any errors due to the Contractor's failure to verify all such grades, elevations, locations, dimensions, or field measurements shall be promptly rectified by Contractor without any additional costs to Owner or extensions of Contract Times.

2. *Contractor's Review of Contract Documents*: If, before or during the performance of the Work, Contractor discovers any conflict, error, ambiguity, or discrepancy within the Contract Documents, or between the Contract Documents and (a) any applicable Law or Regulation, (b) actual field conditions, (c) any standard specification, manual, reference standard, or code, or (d) any instruction of any Supplier, then Contractor shall promptly report it to Engineer in writing. Contractor shall not proceed with the Work affected thereby (except in an emergency as required by Paragraph 7.15) until the conflict, error, ambiguity, or discrepancy is resolved, by a clarification or interpretation by Engineer, or by an amendment or supplement to the Contract issued pursuant to Paragraph 11.01.

3. Contractor shall not be liable to Owner or Engineer for failure to report any conflict, error, ambiguity, or discrepancy in the Contract Documents unless Contractor had actual knowledge thereof, or reasonably should have known thereof.

B. *Resolving Discrepancies*

1. Except as may be otherwise specifically stated in the Contract Documents, the provisions of the part of the Contract Documents prepared by or for Engineer take precedence in resolving any conflict, error, ambiguity, or discrepancy between such provisions of the Contract Documents and:

   a. the provisions of any standard specification, manual, reference standard, or code, or the instruction of any Supplier (whether or not specifically incorporated by reference as a Contract Document); or

   b. the provisions of any Laws or Regulations applicable to the performance of the Work (unless such an interpretation of the provisions of the Contract Documents would result in violation of such Law or Regulation).

3.04 *Requirements of the Contract Documents*

A. During the performance of the Work and until final payment, Contractor and Owner shall submit to the Engineer in writing all matters in question concerning the requirements of the Contract Documents (sometimes referred to as requests for information or interpretation—

RFIs), or relating to the acceptability of the Work under the Contract Documents, as soon as possible after such matters arise. Engineer will be the initial interpreter of the requirements of the Contract Documents, and judge of the acceptability of the Work.

B. Engineer will, with reasonable promptness, render a written clarification, interpretation, or decision on the issue submitted, or initiate an amendment or supplement to the Contract Documents. Engineer's written clarification, interpretation, or decision will be final and binding on Contractor, unless it appeals by submitting a Change Proposal, and on Owner, unless it appeals by filing a Claim.

C. If a submitted matter in question concerns terms and conditions of the Contract Documents that do not involve (1) the performance or acceptability of the Work under the Contract Documents, (2) the design (as set forth in the Drawings, Specifications, or otherwise), or (3) other engineering or technical matters, then Engineer will promptly notify Owner and Contractor in writing that Engineer is unable to provide a decision or interpretation. If Owner and Contractor are unable to agree on resolution of such a matter in question, either party may pursue resolution as provided in Article 12.

3.05 *Reuse of Documents*

A. Contractor and its Subcontractors and Suppliers shall not:

1. have or acquire any title to or ownership rights in any of the Drawings, Specifications, or other documents (or copies of any thereof) prepared by or bearing the seal of Engineer or its consultants, including electronic media versions, or reuse any such Drawings, Specifications, other documents, or copies thereof on extensions of the Project or any other project without written consent of Owner and Engineer and specific written verification or adaptation by Engineer; or

2. have or acquire any title or ownership rights in any other Contract Documents, reuse any such Contract Documents for any purpose without Owner's express written consent, or violate any copyrights pertaining to such Contract Documents.

B. The prohibitions of this Paragraph 3.05 will survive final payment, or termination of the Contract. Nothing herein precludes Contractor from retaining copies of the Contract Documents for record purposes.

ARTICLE 4—COMMENCEMENT AND PROGRESS OF THE WORK

4.01 *Commencement of Contract Times; Notice to Proceed*

A. ~~The Contract Times will commence to run on the 30th day after the Effective Date of the Contract or, if a Notice to Proceed is given, on the day indicated in the Notice to Proceed. A Notice to Proceed may be given at any time within 30 days after the Effective Date of the Contract. In no event will the Contract Times commence to run later than the 60th day after the day of Bid opening or the 30th day after the Effective Date of the Contract, whichever date is earlier~~.

The Contract Times will commence to run on the day indicated in the Notice to Proceed. The Owner shall issue a Notice to Proceed in accordance with La. R.S. 38:2215. In no event will Owner have any obligations or duties to Contractor under the Agreement until the Notice to Proceed is given to Contractor. In no event will the Contract Times commence to run later

than one hundred eighty days after the contract execution or the thirtieth day after the Effective Date of Agreement, whichever date is later, unless the parties otherwise agree.

4.02 *Starting the Work*

A. Contractor shall start to perform the Work within 10 days from the date when the Contract Times commence to run. No Work may be done at the Site prior to such date.

4.03 *Reference Points*

A. ~~Owner~~ Engineer shall provide engineering surveys to establish reference points for construction which in Engineer's judgment are necessary to enable Contractor to proceed with the Work. Contractor shall be responsible for laying out the Work, shall protect and preserve the established reference points and property monuments, and shall make no changes or relocations without the prior written approval of Owner. Contractor shall report to Engineer whenever any reference point or property monument is lost or destroyed or requires relocation because of necessary changes in grades or locations, and shall be responsible for the accurate replacement or relocation of such reference points or property monuments by professionally qualified personnel.

4.04 *Progress Schedule*

A. Contractor shall adhere to the Progress Schedule established in accordance with Paragraph 2.05 as it may be adjusted from time to time as provided below.

1. Contractor shall submit to Engineer for acceptance (to the extent indicated in Paragraph 2.05) proposed adjustments in the Progress Schedule that will not result in changing the Contract Times.

2. Proposed adjustments in the Progress Schedule that will change the Contract Times must be submitted in accordance with the requirements of Article 11.

B. Contractor shall carry on the Work and adhere to the Progress Schedule during all disputes or disagreements with Owner. No Work will be delayed or postponed pending resolution of any disputes or disagreements, or during any appeal process, except as permitted by Paragraph 16.04, or as Owner and Contractor may otherwise agree in writing.

4.05 *Delays in Contractor's Progress*

A. If Owner, Engineer, or anyone for whom Owner is responsible, delays, disrupts, or interferes with the performance or progress of the Work, then Contractor shall be entitled to an equitable adjustment in Contract Price or Contract Times.

B. Contractor shall not be entitled to an adjustment in Contract Price or Contract Times for delay, disruption, or interference caused by or within the control of Contractor. Delay, disruption, and interference attributable to and within the control of a Subcontractor or Supplier shall be deemed to be within the control of Contractor.

C. If Contractor's performance or progress is delayed, disrupted, or interfered with by unanticipated causes not the fault of and beyond the control of Owner, Contractor, and those for which they are responsible, then Contractor shall be entitled to an equitable adjustment in Contract Times. Such an adjustment will be Contractor's sole and exclusive remedy for the delays, disruption, and interference described in this paragraph. Causes of delay, disruption,

or interference that may give rise to an adjustment in Contract Times under this paragraph include but are not limited to the following:

1. Severe and unavoidable natural catastrophes such as fires, floods, epidemics, and earthquakes;
2. Abnormal weather conditions;
3. Acts or failures to act of third-party utility owners or other third-party entities (other than those third-party utility owners or other third-party entities performing other work at or adjacent to the Site as arranged by or under contract with Owner, as contemplated in Article 8); and
4. Acts of war or terrorism.

D. Contractor's entitlement to an adjustment of Contract Times or Contract Price is limited as follows:

1. Contractor's entitlement to an adjustment of the Contract Times is conditioned on the delay, disruption, or interference adversely affecting an activity on the critical path to completion of the Work, as of the time of the delay, disruption, or interference.
2. Contractor shall not be entitled to an adjustment in Contract Price for any delay, disruption, or interference if such delay is concurrent with a delay, disruption, or interference caused by or within the control of Contractor. Such a concurrent delay by Contractor shall not preclude an adjustment of Contract Times to which Contractor is otherwise entitled.
3. Adjustments of Contract Times or Contract Price are subject to the provisions of Article 11.

E. Each Contractor request or Change Proposal seeking an increase in Contract Times or Contract Price must be supplemented by supporting data that sets forth in detail the following:

1. The circumstances that form the basis for the requested adjustment;
2. The date upon which each cause of delay, disruption, or interference began to affect the progress of the Work;
3. The date upon which each cause of delay, disruption, or interference ceased to affect the progress of the Work;
4. The number of days' increase in Contract Times claimed as a consequence of each such cause of delay, disruption, or interference; and
5. The impact on Contract Price, in accordance with the provisions of Paragraph 11.07.

Contractor shall also furnish such additional supporting documentation as Owner or Engineer may require including, where appropriate, a revised progress schedule indicating all the activities affected by the delay, disruption, or interference, and an explanation of the effect of the delay, disruption, or interference on the critical path to completion of the Work.

F. Delays, disruption, and interference to the performance or progress of the Work resulting from the existence of a differing subsurface or physical condition, an Underground Facility that was not shown or indicated by the Contract Documents, or not shown or indicated with

reasonable accuracy, and those resulting from Hazardous Environmental Conditions, are governed by Article 5, together with the provisions of Paragraphs 4.05.D and 4.05.E.

G. Paragraph 8.03 addresses delays, disruption, and interference to the performance or progress of the Work resulting from the performance of certain other work at or adjacent to the Site.

ARTICLE 5—SITE; SUBSURFACE AND PHYSICAL CONDITIONS; HAZARDOUS ENVIRONMENTAL CONDITIONS

5.01 *Availability of Lands*

A. Owner shall furnish the Site. Owner shall notify Contractor in writing of any encumbrances or restrictions not of general application but specifically related to use of the Site with which Contractor must comply in performing the Work.

B. Upon reasonable written request, Owner shall furnish Contractor with a current statement of record legal title and legal description of the lands upon which permanent improvements are to be made and Owner's interest therein as necessary for giving notice of or filing a mechanic's or construction lien against such lands in accordance with applicable Laws and Regulations.

C. Contractor shall provide for all additional lands and access thereto that may be required for temporary construction facilities or storage of materials and equipment.

5.02 *Use of Site and Other Areas*

A. *Limitation on Use of Site and Other Areas*

1. Contractor shall confine construction equipment, temporary construction facilities, the storage of materials and equipment, and the operations of workers to the Site, adjacent areas that Contractor has arranged to use through construction easements or otherwise, and other adjacent areas permitted by Laws and Regulations, and shall not unreasonably encumber the Site and such other adjacent areas with construction equipment or other materials or equipment. Contractor shall assume full responsibility for (a) damage to the Site; (b) damage to any such other adjacent areas used for Contractor's operations; (c) damage to any other adjacent land or areas, or to improvements, structures, utilities, or similar facilities located at such adjacent lands or areas; and (d) for injuries and losses sustained by the owners or occupants of any such land or areas; provided that such damage or injuries result from the performance of the Work or from other actions or conduct of the Contractor or those for which Contractor is responsible.

2. If a damage or injury claim is made by the owner or occupant of any such land or area because of the performance of the Work, or because of other actions or conduct of the Contractor or those for which Contractor is responsible, Contractor shall (a) take immediate corrective or remedial action as required by Paragraph 7.13, or otherwise; (b) promptly attempt to settle the claim as to all parties through negotiations with such owner or occupant, or otherwise resolve the claim by a ~~arbitration or other~~ dispute resolution proceeding, or in a court of competent jurisdiction; and (c) to the fullest extent permitted by Laws and Regulations, indemnify and hold harmless Owner and Engineer, and the officers, directors, members, partners, employees, agents, consultants and subcontractors of each and any of them, from and against any such claim, and against all costs, losses, and damages (including but not limited to all fees and charges of engineers, architects, attorneys, and other professionals and all court or arbitration or other

dispute resolution costs) arising out of or relating to any claim or action, legal or equitable, brought by any such owner or occupant against Owner, Engineer, or any other party indemnified hereunder to the extent caused directly or indirectly, in whole or in part by, or based upon, Contractor's performance of the Work, or because of other actions or conduct of the Contractor or those for which Contractor is responsible.

B. *Removal of Debris During Performance of the Work*: During the progress of the Work the Contractor shall keep the Site and other adjacent areas free from accumulations of waste materials, rubbish, and other debris. Removal and disposal of such waste materials, rubbish, and other debris will conform to applicable Laws and Regulations.

C. *Cleaning*: Prior to Substantial Completion of the Work Contractor shall clean the Site and the Work and make it ready for utilization by Owner. At the completion of the Work Contractor shall remove from the Site and adjacent areas all tools, appliances, construction equipment and machinery, and surplus materials and shall restore to original condition all property not designated for alteration by the Contract Documents.

D. *Loading of Structures*: Contractor shall not load nor permit any part of any structure to be loaded in any manner that will endanger the structure, nor shall Contractor subject any part of the Work or adjacent structures or land to stresses or pressures that will endanger them.

5.03 *Subsurface and Physical Conditions*

A. *Reports and Drawings*: The Supplementary Conditions identify:

1. Those reports of explorations and tests of subsurface conditions at or adjacent to the Site that contain Technical Data;

2. Those drawings of existing physical conditions at or adjacent to the Site, including those drawings depicting existing surface or subsurface structures at or adjacent to the Site (except Underground Facilities), that contain Technical Data; and

3. Technical Data contained in such reports and drawings.

B. *Underground Facilities*: Underground Facilities are shown or indicated on the Drawings, pursuant to Paragraph 5.05, and not in the drawings referred to in Paragraph 5.03.A. Information and data regarding the presence or location of Underground Facilities are not intended to be categorized, identified, or defined as Technical Data.

C. *Reliance by Contractor on Technical Data*: Contractor may rely upon the accuracy of the Technical Data expressly identified in the Supplementary Conditions with respect to such reports and drawings, but such reports and drawings are not Contract Documents. If no such express identification has been made, then Contractor may rely upon the accuracy of the Technical Data as defined in Paragraph 1.01.A.46.b.

D. *Limitations of Other Data and Documents*: Except for such reliance on Technical Data, Contractor may not rely upon or make any claim against Owner or Engineer, or any of their officers, directors, members, partners, employees, agents, consultants, or subcontractors, with respect to:

1. the completeness of such reports and drawings for Contractor's purposes, including, but not limited to, any aspects of the means, methods, techniques, sequences, and procedures of construction to be employed by Contractor, and safety precautions and programs incident thereto;

2. other data, interpretations, opinions, and information contained in such reports or shown or indicated in such drawings;

3. the contents of other Site-related documents made available to Contractor, such as record drawings from other projects at or adjacent to the Site, or Owner's archival documents concerning the Site; or

4. any Contractor interpretation of or conclusion drawn from any Technical Data or any such other data, interpretations, opinions, or information.

E. The Contractor and each Subcontractor shall evaluate and satisfy themselves as to the Site conditions and limitations under which the Work is to be performed, including, without limitation, (1) the location, condition, layout, and nature of the Project Site and surrounding areas; (2) generally prevailing climactic conditions; (3) anticipated labor, supply, and costs; (4) availability and cost of materials, tools, and equipment; and (5) other similar issues. The Owner assumes no responsibility or liability for the physical condition or safety of the Project Site or any improvements located on the Project Site. Except as set forth in Article 4, the Contractor shall be solely responsible for providing a safe place for the performance of the Work. The Owner shall not be required to make adjustments in either the Contract Price or Contract Times arising from a failure by the Contractor or any Subcontractor to comply with the requirements of this paragraph.

5.04 *Differing Subsurface or Physical Conditions*

A. *Notice by Contractor*: If Contractor ~~believes~~ discovers or should have discovered that any subsurface or physical condition that is uncovered or revealed at the Site or adjacent to the Site:

1. is of such a nature as to establish that any Technical Data on which Contractor is entitled to rely as provided in Paragraph 5.03 is materially inaccurate;

2. is of such a nature as to require a change in the Drawings or Specifications;

3. differs materially from that shown or indicated in the Contract Documents; or

4. is of an unusual nature, and differs materially from conditions ordinarily encountered and generally recognized as inherent in work of the character provided for in the Contract Documents;

then Contractor shall, ~~promptly after becoming aware thereof~~ immediately and in any event within 48 hours after the time the Contractor discovers and before further disturbing the subsurface or physical conditions or performing any Work in connection therewith (except in an emergency as required by Paragraph 7.15), notify Owner and Engineer in writing about such condition. Contractor shall not further disturb such condition or perform any Work in connection therewith (except with respect to an emergency) until receipt of a written statement permitting Contractor to do so.

B. *Engineer's Review*: After receipt of written notice as required by the preceding paragraph, Engineer will promptly review the subsurface or physical condition in question; determine whether it is necessary for Owner to obtain additional exploration or tests with respect to the condition; conclude whether the condition falls within any one or more of the differing site condition categories in Paragraph 5.04.A; obtain any pertinent cost or schedule information from Contractor; prepare recommendations to Owner regarding the Contractor's resumption of Work in connection with the subsurface or physical condition in question and the need for

any change in the Drawings or Specifications; and advise Owner in writing of Engineer's findings, conclusions, and recommendations.

C. *Owner's Statement to Contractor Regarding Site Condition*: After receipt of Engineer's written findings, conclusions, and recommendations, Owner shall issue a written statement to Contractor (with a copy to Engineer) regarding the subsurface or physical condition in question, addressing the resumption of Work in connection with such condition, indicating whether any change in the Drawings or Specifications will be made, and adopting or rejecting Engineer's written findings, conclusions, and recommendations, in whole or in part.

D. *Early Resumption of Work*: If at any time Engineer determines that Work in connection with the subsurface or physical condition in question may resume prior to completion of Engineer's review or Owner's issuance of its statement to Contractor, because the condition in question has been adequately documented, and analyzed on a preliminary basis, then the Engineer may at its discretion instruct Contractor to resume such Work.

E. *Possible Price and Times Adjustments*

1. Contractor shall be entitled to an equitable adjustment in Contract Price or Contract Times, to the extent that the existence of a differing subsurface or physical condition, or any related delay, disruption, or interference, causes an increase or decrease in Contractor's cost of, or time required for, performance of the Work; subject, however, to the following:

    a. Such condition must fall within any one or more of the categories described in Paragraph 5.04.A;

    b. With respect to Work that is paid for on a unit price basis, any adjustment in Contract Price will be subject to the provisions of Paragraph 13.03; and,

    c. Contractor's entitlement to an adjustment of the Contract Times is subject to the provisions of Paragraphs 4.05.D and 4.05.E.

2. Contractor shall not be entitled to any adjustment in the Contract Price or Contract Times with respect to a subsurface or physical condition if:

    a. Contractor knew of the existence of such condition at the time Contractor made a commitment to Owner with respect to Contract Price and Contract Times by the submission of a Bid or becoming bound under a negotiated contract, or otherwise;

    b. The existence of such condition reasonably could have been discovered or revealed as a result of any examination, investigation, exploration, test, or study of the Site and contiguous areas expressly required by the Bidding Requirements or Contract Documents to be conducted by or for Contractor prior to Contractor's making such commitment; or

    c. Contractor failed to give the written notice required by Paragraph 5.04.A.

3. If Owner and Contractor agree regarding Contractor's entitlement to and the amount or extent of any adjustment in the Contract Price or Contract Times, then any such adjustment will be set forth in a Change Order.

4. Contractor may submit a Change Proposal regarding its entitlement to or the amount or extent of any adjustment in the Contract Price or Contract Times, no later than 30 days

after Owner's issuance of the Owner's written statement to Contractor regarding the subsurface or physical condition in question.

F. *Underground Facilities; Hazardous Environmental Conditions*: Paragraph 5.05 governs rights and responsibilities regarding the presence or location of Underground Facilities. Paragraph 5.06 governs rights and responsibilities regarding Hazardous Environmental Conditions. The provisions of Paragraphs 5.03 and 5.04 are not applicable to the presence or location of Underground Facilities, or to Hazardous Environmental Conditions.

5.05 *Underground Facilities*

A. *Contractor's Responsibilities*: Unless it is otherwise expressly provided in the Supplementary Conditions, the cost of all of the following are included in the Contract Price, and Contractor shall have full responsibility for:

1. reviewing and checking all information and data regarding existing Underground Facilities at the Site;
2. complying with applicable state and local utility damage prevention Laws and Regulations;
3. verifying the actual location of those Underground Facilities shown or indicated in the Contract Documents as being within the area affected by the Work, by exposing such Underground Facilities during the course of construction;
4. coordination of the Work with the owners (including Owner) of such Underground Facilities, during construction; and
5. the safety and protection of all existing Underground Facilities at the Site, and repairing any damage thereto resulting from the Work.

B. *Notice by Contractor*: If Contractor believes that an Underground Facility that is uncovered or revealed at the Site was not shown or indicated on the Drawings, or was not shown or indicated on the Drawings with reasonable accuracy, then Contractor shall, ~~promptly after becoming aware thereof~~ immediately and in any event within 24 hours after Contractor discovers and before further disturbing conditions affected thereby or performing any Work in connection therewith (except in an emergency as required by Paragraph 7.15), notify Owner and Engineer in writing regarding such Underground Facility.

C. *Engineer's Review*: Engineer will:

1. promptly review the Underground Facility and conclude whether such Underground Facility was not shown or indicated on the Drawings, or was not shown or indicated with reasonable accuracy;
2. identify and communicate with the owner of the Underground Facility; prepare recommendations to Owner (and if necessary issue any preliminary instructions to Contractor) regarding the Contractor's resumption of Work in connection with the Underground Facility in question;
3. obtain any pertinent cost or schedule information from Contractor; determine the extent, if any, to which a change is required in the Drawings or Specifications to reflect and document the consequences of the existence or location of the Underground Facility; and
4. advise Owner in writing of Engineer's findings, conclusions, and recommendations.

During such time, Contractor shall be responsible for the safety and protection of such Underground Facility.

D. *Owner's Statement to Contractor Regarding Underground Facility*: After receipt of Engineer's written findings, conclusions, and recommendations, Owner shall issue a written statement to Contractor (with a copy to Engineer) regarding the Underground Facility in question addressing the resumption of Work in connection with such Underground Facility, indicating whether any change in the Drawings or Specifications will be made, and adopting or rejecting Engineer's written findings, conclusions, and recommendations in whole or in part.

E. *Early Resumption of Work*: If at any time Engineer determines that Work in connection with the Underground Facility may resume prior to completion of Engineer's review or Owner's issuance of its statement to Contractor, because the Underground Facility in question and conditions affected by its presence have been adequately documented, and analyzed on a preliminary basis, then the Engineer may at its discretion instruct Contractor to resume such Work.

F. *Possible Price and Times Adjustments*

1. Contractor shall be entitled to an equitable adjustment in the Contract Price or Contract Times, to the extent that any existing Underground Facility at the Site that was not shown or indicated on the Drawings, or was not shown or indicated with reasonable accuracy, or any related delay, disruption, or interference, causes an increase or decrease in Contractor's cost of, or time required for, performance of the Work; subject, however, to the following:

    a. With respect to Work that is paid for on a unit price basis, any adjustment in Contract Price will be subject to the provisions of Paragraph 13.03;

    b. Contractor's entitlement to an adjustment of the Contract Times is subject to the provisions of Paragraphs 4.05.D and 4.05.E; and

    c. Contractor gave the notice required in Paragraph 5.05.B.

2. If Owner and Contractor agree regarding Contractor's entitlement to and the amount or extent of any adjustment in the Contract Price or Contract Times, then any such adjustment will be set forth in a Change Order.

3. Contractor may submit a Change Proposal regarding its entitlement to or the amount or extent of any adjustment in the Contract Price or Contract Times, no later than 30 days after Owner's issuance of the Owner's written statement to Contractor regarding the Underground Facility in question.

4. The information and data shown or indicated on the Drawings with respect to existing Underground Facilities at the Site is based on information and data (a) furnished by the owners of such Underground Facilities, or by others, (b) obtained from available records, or (c) gathered in an investigation conducted in accordance with the current edition of ASCE 38, Standard Guideline for the Collection and Depiction of Existing Subsurface Utility Data, by the American Society of Civil Engineers. If such information or data is incorrect or incomplete, Contractor's remedies are limited to those set forth in this Paragraph 5.05.F.

5.06 *Hazardous Environmental Conditions at Site*

A. *Reports and Drawings*: The Supplementary Conditions identify:

1. those reports known to Owner relating to Hazardous Environmental Conditions that have been identified at or adjacent to the Site;

2. drawings known to Owner relating to Hazardous Environmental Conditions that have been identified at or adjacent to the Site; and

3. Technical Data contained in such reports and drawings.

B. *Reliance by Contractor on Technical Data Authorized*: Contractor may rely upon the accuracy of the Technical Data expressly identified in the Supplementary Conditions with respect to such reports and drawings, but such reports and drawings are not Contract Documents. If no such express identification has been made, then Contractor may rely on the accuracy of the Technical Data as defined in Paragraph 1.01.A.46.b. Except for such reliance on Technical Data, Contractor may not rely upon or make any claim against Owner or Engineer, or any of their officers, directors, members, partners, employees, agents, consultants, or subcontractors, with respect to:

1. the completeness of such reports and drawings for Contractor's purposes, including, but not limited to, any aspects of the means, methods, techniques, sequences and procedures of construction to be employed by Contractor, and safety precautions and programs incident thereto;

2. other data, interpretations, opinions, and information contained in such reports or shown or indicated in such drawings; or

3. any Contractor interpretation of or conclusion drawn from any Technical Data or any such other data, interpretations, opinions or information.

C. ~~Contractor shall not be responsible for removing or remediating any Hazardous Environmental Condition encountered, uncovered, or revealed at the Site unless such removal or remediation is expressly identified in the Contract Documents to be within the scope of the Work~~. Contractor must take all precautions to discover and locate any Hazardous Environmental Condition at the Site that may present a substantial danger to persons or property exposed thereto in connection with the Work at the Site.

D. Contractor shall be responsible for controlling, containing, and duly removing all Constituents of Concern brought to the Site by Contractor, Subcontractors, Suppliers, or anyone else for whom Contractor is responsible, and for any associated costs; and for the costs of removing and remediating any Hazardous Environmental Condition created by the presence of any such Constituents of Concern.

E. If Contractor encounters, uncovers, or reveals a Hazardous Environmental Condition whose removal or remediation is not expressly identified in the Contract Documents as being within the scope of the Work, or if Contractor or anyone for whom Contractor is responsible creates a Hazardous Environmental Condition, then Contractor shall ~~immediately~~ within 24 hours: (1) secure or otherwise isolate such condition; (2) stop all Work in connection with such condition and in any area affected thereby (except in an emergency as required by Paragraph 7.15); and (3) notify Owner and Engineer (and promptly thereafter confirm such notice in writing). Owner shall promptly consult with Engineer concerning the necessity for Owner to retain a qualified expert to evaluate such condition or take corrective action, if any. Promptly after

consulting with Engineer, Owner shall take such actions as are necessary to permit Owner to timely obtain required permits and provide Contractor the written notice required by Paragraph 5.06.F. If Contractor or anyone for whom Contractor is responsible created the Hazardous Environmental Condition in question, then Owner may remove and remediate the Hazardous Environmental Condition, and impose a set-off against payments to account for the associated costs.

F. Contractor shall not resume Work in connection with such Hazardous Environmental Condition or in any affected area until after Owner has obtained any required permits related thereto, and delivered written notice to Contractor either (1) specifying that such condition and any affected area is or has been rendered safe for the resumption of Work, or (2) specifying any special conditions under which such Work may be resumed safely.

G. If Owner and Contractor cannot agree as to entitlement to or on the amount or extent, if any, of any adjustment in Contract Price or Contract Times, as a result of such Work stoppage, such special conditions under which Work is agreed to be resumed by Contractor, or any costs or expenses incurred in response to the Hazardous Environmental Condition, then within 30 days of Owner's written notice regarding the resumption of Work, Contractor may submit a Change Proposal, or Owner may impose a set-off. Entitlement to any such adjustment is subject to the provisions of Paragraphs 4.05.D, 4.05.E, 11.07, and 11.08.

H. If, after receipt of such written notice, Contractor does not agree to resume such Work based on a reasonable belief it is unsafe, or does not agree to resume such Work under such special conditions, then Owner may order the portion of the Work that is in the area affected by such condition to be deleted from the Work, following the contractual change procedures in Article 11. Owner may have such deleted portion of the Work performed by Owner's own forces or others in accordance with Article 8.

~~I. To the fullest extent permitted by Laws and Regulations, Owner shall indemnify and hold harmless Contractor, Subcontractors, and Engineer, and the officers, directors, members, partners, employees, agents, consultants, and subcontractors of each and any of them, from and against all claims, costs, losses, and damages (including but not limited to all fees and charges of engineers, architects, attorneys, and other professionals, and all court, arbitration, or other dispute resolution costs) arising out of or relating to a Hazardous Environmental Condition, provided that such Hazardous Environmental Condition (1) was not shown or indicated in the Drawings, Specifications, or other Contract Documents, identified as Technical Data entitled to limited reliance pursuant to Paragraph 5.06.B, or identified in the Contract Documents to be included within the scope of the Work, and (2) was not created by Contractor or by anyone for whom Contractor is responsible. Nothing in this Paragraph 5.06.I obligates Owner to indemnify any individual or entity from and against the consequences of that individual's or entity's own negligence.~~

~~J~~ I. To the fullest extent permitted by Laws and Regulations, Contractor shall indemnify and hold harmless Owner and Engineer, and the officers, directors, members, partners, employees, agents, consultants, and subcontractors of each and any of them, from and against all claims, costs, losses, and damages (including but not limited to all fees and charges of engineers, architects, attorneys, and other professionals and all court or arbitration or other dispute resolution costs) arising out of or relating to the failure to control, contain, or remove a Constituent of Concern brought to the Site by Contractor or by anyone for whom Contractor is responsible, or to a Hazardous Environmental Condition created by Contractor or by anyone

for whom Contractor is responsible. Nothing in this Paragraph 5.06.J obligates Contractor to indemnify any individual or entity from and against the consequences of that individual's or entity's own negligence.

~~K~~ J. The provisions of Paragraphs 5.03, 5.04, and 5.05 do not apply to the presence of Constituents of Concern or to a Hazardous Environmental Condition uncovered or revealed at the Site.

ARTICLE 6—BONDS AND INSURANCE

6.01 *Performance, Payment, and Other Bonds*

A. Contractor shall furnish a performance bond and a payment bond, each in an amount at least equal to the Contract Price as security for the faithful performance and payment of Contractor's obligations under the Contract. These bonds must remain in effect until one year after the date when final payment becomes due or until completion of the correction period specified in Paragraph 15.08, whichever is later, except as provided otherwise by Laws or Regulations, the terms of a prescribed bond form, the Supplementary Conditions, or other provisions of the Contract.

B. Contractor shall also furnish such other bonds (if any) as are required by the Supplementary Conditions or other provisions of the Contract.

C. All bonds must be in the form included in the Bidding Documents or otherwise specified by Owner prior to execution of the Contract, except as provided otherwise by Laws or Regulations, and must be issued and signed by a surety ~~named in "Companies Holding Certificates of Authority as Acceptable Sureties on Federal Bonds and as Acceptable Reinsuring Companies" as published in Department Circular 570 (as amended and supplemented) by the Bureau of the Fiscal Service, U.S. Department of the Treasury~~ meeting the requirements set forth in La. R.S. 38:2218 and 2219 and any other requirements and qualifications set forth in the Supplementary Conditions. A bond signed by an agent or attorney-in-fact must be accompanied by a certified copy of that individual's authority to bind the surety. The evidence of authority must show that it is effective on the date the agent or attorney-in-fact signed the accompanying bond.

D. Contractor shall obtain the required bonds from surety companies that are duly licensed or authorized, in the state or jurisdiction in which the Project is located, to issue bonds in the required amounts.

E. If the surety on a bond furnished by Contractor is declared bankrupt or becomes insolvent, or the surety ceases to meet the requirements above, then Contractor shall promptly notify Owner and Engineer in writing and shall, within 20 days after the event giving rise to such notification, provide another bond and surety, both of which must comply with the bond and surety requirements above.

F. If Contractor has failed to obtain a required bond, Owner may exclude the Contractor from the Site and exercise Owner's termination rights under Article 16.

G. Upon request to Owner from any Subcontractor, Supplier, or other person or entity claiming to have furnished labor, services, materials, or equipment used in the performance of the Work, Owner shall provide a copy of the payment bond to such person or entity.

H. Upon request to Contractor from any Subcontractor, Supplier, or other person or entity claiming to have furnished labor, services, materials, or equipment used in the performance of the Work, Contractor shall provide a copy of the payment bond to such person or entity.

I. Performance Bond: Any surety bond written for a Jefferson Parish Public Works project shall be written by a surety or insurance company currently on the U.S. Department of Treasury Financial Management Service list of approved bonding companies which is published annually in the Federal Register, or by a Louisiana domiciled insurance company with at least an A rating in the latest printing of the A.M. Best's Key Rating Guide to write individual bonds up to ten percent of policyholder's surplus as shown in the A.M. Best's Key Rating Guide or by a surety company that complies with the requirements of La. R.S. 38:2219.

No surety will be accepted from a bondsman which does not have a permanent agent or representative in the State upon whom notices referred to in the General Conditions may be served. Service of said notice on said agent or representative in the State shall be equal to service of notice on the president of the surety, or such other officer as may be concerned. Should the Contractor's surety, even though approved and accepted by the Owner, subsequently remove its agency or representative from the State or terminates its residency or license in this State or become insolvent, bankrupt, or otherwise fail, the Contractor shall immediately furnish a new bond from another company approved by the Owner, at no additional cost to the Owner. The new bond shall be executed upon the same terms and conditions as the original bond.

J. Alternative Security: The Owner may in its discretion accept alternative security pursuant to the requirements set forth in the Louisiana public contract law (La. R.S. 38:2181 *et.seq.*).

K. Scope of the Bond and Obligation of the Surety: The Contractor's surety shall obligate itself to all the terms and covenants of the Contract Documents covering the Work to be performed hereunder. The Owner reserves the right to order extra work or make changes by altering, adding to, or deducting from the Work under the conditions and in the manner hereinbefore described without notice to the Contractor's surety and without in any manner affecting the liability of bondsman or releasing it from any of its obligations hereunder.

The Bond shall also secure for the Owner the faithful performance of the Contract in strict accordance with the plans and specifications and Contract Documents. It shall protect the Owner against all lien laws of the State and shall provide for payment of reasonable attorney's fees for enforcement of the Contract and institution of concursus proceedings, if such proceedings become necessary. Likewise, it shall provide that if the Engineer is put to labor or expense by enforcement of the Contract and institution of concursus proceedings or through delinquency or insolvency of the Contract they shall be equitably paid for such extra expense and services involved.

The surety of the Contractor shall be and does hereby declare and acknowledge itself by acceptance to be bound to the Owner as guarantor jointly and in solido with the Contractor for fulfillment of the foregoing terms including, but not limited to, any provisions for actual or liquidated damages.

6.02 *Insurance—General Provisions*

A. ~~Owner and~~ Contractor shall obtain and maintain insurance as required in this article, Article 7.18, and in the Supplementary Conditions. Pursuant to La. R.S. 9:2780.1, the cost of such insurance shall be included in the Contract Price.

B. All insurance required by the Contract to be purchased and maintained by ~~Owner and~~ Contractor shall be obtained from insurance companies that are duly licensed or authorized in the ~~state or jurisdiction in which the Project is located~~ State of Louisiana to issue insurance policies for the required limits and coverages. Unless a different standard is indicated in the Supplementary Conditions, all companies that provide insurance policies required under this Contract shall have an A.M. Best rating of A-VI or better. This requirement will be waived for workers' compensation coverage only for those contractors whose workers' compensation coverage is placed with companies who participate in the State of Louisiana Workers' Compensation Assigned Risk Pool or the Louisiana Worker's Compensation Corporation.

C. Alternative forms of insurance coverage, including but not limited to self-insurance and "Occupational Accident and Excess Employer's Indemnity Policies," are not sufficient to meet the insurance requirements of this Contract, unless expressly allowed in the Supplementary Conditions.

D. Contractor shall deliver to Owner, with copies to each additional insured identified herein or in the Contract, certificates of insurance and endorsements establishing that Contractor has obtained and is maintaining the policies and coverages required by the Contract. Contractor shall deliver these documents when returning the signed copies of the agreement to Owner. Each such certificate shall include the Project name, the Project number, proposal number, and Owner's address as identified in the Agreement. Upon request by Owner or any other insured, Contractor shall also furnish other evidence of such required insurance, including but not limited to copies of policies, documentation of applicable self-insured retentions (if allowed) and deductibles, full disclosure of all relevant exclusions, and evidence of insurance required to be purchased and maintained by Subcontractors or Suppliers. In any documentation furnished under this provision, Contractor, Subcontractors, and Suppliers may block out (redact) (1) any confidential premium or pricing information and (2) any wording specific to a project or jurisdiction other than those applicable to this Contract.

~~E. Owner shall deliver to Contractor, with copies to each additional insured identified in the Contract, certificates of insurance and endorsements establishing that Owner has obtained and is maintaining the policies and coverages required of Owner by the Contract (if any). Upon request by Contractor or any other insured, Owner shall also provide other evidence of such required insurance (if any), including but not limited to copies of policies, documentation of applicable self-insured retentions (if allowed) and deductibles, and full disclosure of all relevant exclusions. In any documentation furnished under this provision, Owner may block out (redact) (1) any confidential premium or pricing information and (2) any wording specific to a project or jurisdiction other than those relevant to this Contract.~~

~~F~~ E. Failure of Owner to demand such certificates or other evidence of the other party's full compliance with these insurance requirements, or failure of Owner to identify a deficiency in compliance from the evidence provided, will not be construed as a waiver of the other party's obligation to obtain and maintain such insurance.

~~G~~ F. In addition to the liability insurance required to be provided by Contractor, the Owner, at Owner's option, may purchase and maintain Owner's own liability insurance. Owner's liability policies, if any, operate separately and independently from policies required to be provided by Contractor, and Contractor cannot rely upon Owner's liability policies for any of Contractor's obligations to the Owner, Engineer, or third parties.

~~H~~ G. Contractor shall require:

1. Subcontractors to purchase and maintain worker's compensation, commercial general liability, and other insurance that is appropriate for their participation in the Project, and to name as additional insureds Owner ~~and Engineer~~ (and any other individuals or entities identified in the Supplementary Conditions as additional insureds on Contractor's liability policies) on each Subcontractor's commercial general liability insurance policy; and

2. Suppliers to purchase and maintain insurance that is appropriate for their participation in the Project.

~~I~~ H. If ~~either party~~ Contractor does not purchase or maintain the insurance required ~~of such party by~~ by Owner in accordance with the Contract, ~~such party~~ Contractor shall notify ~~the other party~~ Owner in writing of such failure to purchase prior to the start of the Work, or of such failure to maintain prior to any change in the required coverage.

~~J~~ I. If Contractor has failed to obtain and maintain required insurance, Contractor's entitlement to enter or remain at the Site will end immediately, and Owner may impose an appropriate set-off against payment for any associated costs (including but not limited to the cost of purchasing necessary insurance coverage), and exercise Owner's termination rights under Article 16.

~~K~~ J. Without prejudice to any other right or remedy, if ~~a party~~ Contractor has failed to obtain required insurance, ~~the other party~~ Owner may elect (but is in no way obligated) to obtain equivalent insurance to protect ~~such other party's~~ Owner's interests at the expense of ~~the party~~ Contractor who was required to provide such coverage, and the Contract Price will be adjusted accordingly.

~~L~~ K. Owner does not represent that insurance coverage and limits established in this Contract necessarily will be adequate to protect Contractor or Contractor's interests. Contractor is responsible for determining whether such coverage and limits are adequate to protect its interests, and for obtaining and maintaining any additional insurance that Contractor deems necessary.

~~M~~ L. The insurance and insurance limits required herein will not be deemed as a limitation on Contractor's liability, or that of its Subcontractors or Suppliers, under the indemnities granted to Owner and other individuals and entities in the Contract or otherwise.

~~N~~ M. All the policies of insurance required to be purchased and maintained under this Contract will contain a provision or endorsement that the coverage afforded will not be canceled, or renewal refused, until at least 10 days prior written notice has been given to the purchasing policyholder. Within three days of receipt of any such written notice, the purchasing policyholder shall provide a copy of the notice to each other insured and Engineer.

6.03 *Contractor's Insurance*

A. *Required Insurance*: Contractor shall purchase and maintain Worker's Compensation, Commercial General Liability, and other insurance pursuant to the specific requirements of the Supplementary Conditions.

B. *General Provisions*: The policies of insurance required by this Paragraph 6.03 as supplemented must:

1. include at least the specific coverages required;

2. be written for not less than the limits provided herein or in the Supplementary Conditions, or those required by Laws or Regulations, whichever is greater;

3. remain in effect at least until the Work is complete (as set forth in Paragraph 15.06.D), and longer if expressly required elsewhere in this Contract, and at all times thereafter when Contractor may be correcting, removing, or replacing defective Work as a warranty or correction obligation, or otherwise, or returning to the Site to conduct other tasks arising from the Contract;

4. apply with respect to the performance of the Work, whether such performance is by Contractor, any Subcontractor or Supplier, or by anyone directly or indirectly employed by any of them to perform any of the Work, or by anyone for whose acts any of them may be liable; and

5. include all necessary endorsements to support the stated requirements.

C. *Additional Insureds*: The Contractor's commercial general liability, automobile liability, employer's liability, umbrella or excess, pollution liability, and unmanned aerial vehicle liability policies, if required by this Contract, must:

1. include and list as additional insureds Owner ~~and Engineer~~ and any individuals or entities identified as additional insureds in the Supplementary Conditions;

2. include coverage for the respective officers, directors, members, partners, employees, and consultants of all such additional insureds;

3. afford primary coverage to these additional insureds for all claims covered thereby (including as applicable those arising from both ongoing and completed operations);

4. not seek contribution from insurance maintained by the additional insured;

5. as to commercial general liability insurance, apply to additional insureds with respect to liability caused in whole or in part by Contractor's acts or omissions, or the acts and omissions of those working on Contractor's behalf, in the performance of Contractor's operations; and

6. with respect to workers' compensation only, include a Waiver of Subrogation in favor of the Owner and any principals for whom the Owner is working, including any co-lessors of such principals; and, with respect to all of the foregoing, be subject to the approval of the Owner.

D. The limits of liability for the insurance required by paragraph 6.03 of the General Conditions shall provide the following coverage for not less than the following amounts or greater where required by Laws and Regulations, and any Jefferson Parish resolutions:

1. Workers' Compensation, etc. under the General Conditions:

   The CONTRACTOR shall take out and maintain during the life of this contract, Worker's Compensation Insurance for all his employees in any way engaged in this project. As required by Louisiana State Statute exception: employer's liability shall be $1,000,000 per occurrence when work is to be over water and involves maritime exposures, otherwise this limit shall be no less than $500,000 per occurrence.

2. CONTRACTOR's Comprehensive General Liability Insurance under the General Conditions which shall also include completed operations and product liability coverage:

   The CONTRACTOR shall take out and maintain during the life of this contract Comprehensive General Liability Insurance with a combined Single Limit per occurrence for bodily injury and property damage. This insurance shall include coverage for bodily injury and property damage, and indicate on the certificate of insurance the following:

   1. Premises - operations;
   2. Broad form contractual liability;
   3. Products and completed operations;
   4. Use of contractors and sub-contractors;
   5. Personal Injury;
   6. Broad form property damage;
   7. Explosion, collapse and underground [XCU] coverage.

NOTE: On the certificate of insurance, under the description of operations, the following wording is required: The aggregate loss limit applies to each project or a copy of ISO Form CG 25 03 [ed. 11-85 or latest form] shall be submitted.

COMBINED SINGLE LIMITS [CSL] -AMOUNT OF INSURANCE REQUIRED

CONTRACTS UP TO $1,000,000:

General contracts - each occurrence/ minimum limits $500,000.00,

New construction/renovations - each occurrence/minimum limits $500,000.00*** [depending on building value],

CONTRACTS OVER $1,000,000:

General contracts - each occurrence/ minimum limits $1,000,000.00,

New construction/renovations - each occurrence/minimum limits $1,000,000.00*** [depending on building value].

*** WHILE THE MINIMUM COMBINED SINGLE LIMITS OF $500,000 IS REQUIRED FOR ALL RENOVATION, THE VALUE OF THE BUILDING SHALL BE MULTIPLIED BY 10% AND THE INSURANCE REQUIREMENTS WILL BE INCREASED AT $1,000,000 INTERVALS AND ROUNDED TO THE NEAREST MILLION.

EXAMPLE: RENOVATIONS ON A THIRTY-THREE MILLION DOLLAR BUILDING WOULD REQUIRE THREE MILLION DOLLARS, [$3,000,000] MINIMUM COMBINED SINGLE LIMITS OF COVERAGE

The CONTRACTOR shall take out and maintain a policy of Umbrella Liability Coverage in excess of the primary insurance afforded above and including all operations of the CONTRACTOR, with minimum limits of $1,000,000.00.

3. The CONTRACTOR shall take out and maintain during the life of this contract Business Automobile Liability Insurance with a Combined Single Limit of $1,000,000 per Occurrence for bodily injury and property damage, unless otherwise indicated. This insurance shall include for bodily injury and property damage the following coverage:

1) Any automobiles;

2) Owned automobiles;

3) Hired automobiles;

4) Non-owned automobiles.

4. OWNER's Protective Liability.

The CONTRACTOR shall take out and maintain a policy of OWNER's Protective Liability for the same limits of liability for bodily injury and property damage liability and conditions as provided hereinabove under "Comprehensive General Liability Insurance".

The cost of this coverage is at the CONTRACTOR's expense.

5. Builder's Risk Insurance

The CONTRACTOR shall take out and maintain Builder's Risk Insurance at his expense, to insure both the OWNER and CONTRACTOR as their interest may appear. These polices must cover for such amount of the work as is determined by the ENGINEER and/or Architect and shall be the all-risk type of coverage. Although the insurance takes account of payments during the course of the construction from the OWNER to the CONTRACTOR, it is understood that the work shall be at the risk of the CONTRACTOR until finally accepted by the OWNER as a whole pursuant to the provisions of the General Conditions. Except as otherwise provided by law, the Parish Attorney's Office with the concurrence of the Director of Risk Management is authorized to omit in whole or part the insurance requirements of this section in connection with such contracts.

6. Miscellaneous

(a) If at any time any of the said policies shall be or becomes unsatisfactory to the OWNER as to form or substance; or if a company issuing any such policy shall be or become unsatisfactory to the OWNER, the CONTRACTOR/Subcontractors shall promptly obtain a new policy, submit the same to the OWNER for approval and submit a certificate thereof as provided above.

Upon failure of a CONTRACTOR/Subcontractor to furnish to deliver and maintain such insurance as above provide this Contract, at the election of the OWNER, may be forthwith declared suspended, discontinued or terminated. Failure of the CONTRACTOR/Subcontractor to take out and/or to maintain insurance shall not relieve the CONTRACTOR/Subcontractor from any liability under the contract, nor shall the insurance requirements be construed to conflict with the obligation of the CONTRACTOR/Subcontractor concerning indemnification.

(b) **WAIVER.** Except as otherwise provided by law, the coverage requirements of this section may be waived in whole or part on contracts under $100,000.00 and the Chairman of the Council is authorized to use his discretion in regard to insurance requirements for such contracts. Except as otherwise provided by law, the Parish Attorney's Office with the concurrence of the Director of Risk Management is authorized to omit in whole or part the insurance requirements of this section in connection with such contracts.

E. The policies of insurance so required by paragraph 6.03 to be purchased and maintained by CONTRACTOR shall indicate the project number, proposal number, and OWNER's address as identified in the Agreement and shall also include the following clauses:

1. The CONTRACTOR/Sub-contractor insurers will have no right of recovery or subrogation against the OWNER, it being the intention of the parties that the insurance policy so affected shall protect both parties and be the primary coverage for any and all losses covered by the below described insurance.

2. The OWNER shall be named as additional insured as regards to negligence by the CONTRACTOR [ISO Forms CG 20 10 (Form B) or latest applicable ISO form], or equivalent.

3. The insurance companies issuing the policy or policies shall have no recourse against the OWNER for payment of any premiums or for assessments under any form of policy.

4. Any and all deductibles in the insurance policies shall be assumed by and be for the amount of $10,000.00 unless increased as set forth in section 5.04 C6(a) and at the sole risk of the CONTRACTOR/Sub-contractor.

5. Any and all communications regarding the insurance shall include the Project name, Project number, proposal number, and OWNER's address, as identified in the Agreement.

6.04 *Builder's Risk and Other Property Insurance*

A. *Builder's Risk*: Unless otherwise provided in the Supplementary Conditions, Contractor ~~shall~~ is not required to purchase and maintain builder's risk insurance upon the Work on a completed value basis, in the amount of the Work's full insurable replacement cost (subject to such deductible amounts as may be provided in the Supplementary Conditions or required by Laws and Regulations). ~~The specific requirements applicable to the builder's risk insurance are set forth in the Supplementary Conditions~~.

Except as otherwise provided by law, the Parish Attorney's Office with the concurrence of the Director of Risk Management is authorized to omit in whole or part the insurance requirements of this section in connection with such contracts.

B. *Property Insurance for Facilities of Owner Where Work Will Occur*: ~~Owner is responsible for obtaining and maintaining property insurance covering each existing structure, building, or facility in which any part of the Work will occur, or to which any part of the Work will attach or be adjoined. Such property insurance will be written on a special perils (all-risk) form, on a replacement cost basis, providing coverage consistent with that required for the builder's risk insurance, and will be maintained until the Work is complete, as set forth in Paragraph 15.06.D.~~

Owner shall not be responsible for purchasing and maintaining any property insurance specified in this paragraph 6.04 to protect the interests of Contractor, Subcontractors, or others in the Work to the extent of any deductible amounts that are identified herein or in the Supplementary Conditions. The risk of loss within such identified deductible amount will be borne by Contractor, Subcontractors, or others suffering any such loss, and if any of them wishes property insurance coverage within the limits of such amounts, each may purchase and maintain it at the purchaser's own expense.

~~C. *Property Insurance for Substantially Complete Facilities*: Promptly after Substantial Completion, and before actual occupancy or use of the substantially completed Work, Owner will obtain property insurance for such substantially completed Work, and maintain such property insurance at least until the Work is complete, as set forth in Paragraph 15.06.D. Such property insurance will be written on a special perils (all-risk) form, on a replacement cost basis, and provide coverage consistent with that required for the builder's risk insurance. The builder's risk insurance may terminate upon written confirmation of Owner's procurement of such property insurance.~~

~~D~~ C. *Partial Occupancy or Use by Owner*: If Owner will occupy or use a portion or portions of the Work prior to Substantial Completion of all the Work, as provided in Paragraph 15.04, then Owner (directly, if it is the purchaser of the builder's risk policy, or through Contractor) will provide advance notice of such occupancy or use to the builder's risk insurer, and obtain an endorsement consenting to the continuation of coverage prior to commencing such partial occupancy or use.

~~E~~ D. *Insurance of Other Property; Additional Insurance*: If the express insurance provisions of the Contract do not require or address the insurance of a property item or interest, then the entity or individual owning such property item will be responsible for insuring it. If Contractor elects to obtain other special insurance to be included in or supplement the builder's risk or property insurance policies provided under this Paragraph 6.04, it may do so at Contractor's expense.

6.05 *Property Losses; Subrogation*

A. The builder's risk insurance policy purchased and maintained in accordance with Paragraph 6.04 (or an installation floater policy if authorized by the Supplementary Conditions), will contain provisions to the effect that in the event of payment of any loss or damage the insurer will have no rights of recovery against any insureds thereunder, or against Engineer or its consultants, or their officers, directors, members, partners, employees, agents, consultants, or subcontractors.

~~1. Owner and Contractor waive all rights against each other and the respective officers, directors, members, partners, employees, agents, consultants, and subcontractors of each and any of them, for all losses and damages caused by, arising out of, or resulting from any of the perils, risks, or causes of loss covered by such policies and any other property insurance applicable to the Work; and, in addition, waive all such rights against Engineer, its consultants, all individuals or entities identified in the Supplementary Conditions as builder's risk or installation floater insureds, and the officers, directors, members, partners, employees, agents, consultants, and subcontractors of each and any of them, under such policies for losses and damages so caused.~~

~~2. None of the above waivers extends to the rights that any party making such waiver may have to the proceeds of insurance held by Owner or Contractor as trustee or fiduciary, or otherwise payable under any policy so issued.~~

B. Any property insurance policy maintained by Owner covering any loss, damage, or consequential loss to Owner's existing structures, buildings, or facilities in which any part of the Work will occur, or to which any part of the Work will attach or adjoin; to adjacent structures, buildings, or facilities of Owner; or to part or all of the completed or substantially completed Work, during partial occupancy or use pursuant to Paragraph 15.04, after Substantial Completion pursuant to Paragraph 15.03, or after final payment pursuant to Paragraph 15.06, will contain provisions to the effect that in the event of payment of any loss or damage the insurer will have no rights of recovery against any insureds thereunder, or against Contractor, Subcontractors, or Engineer, or the officers, directors, members, partners, employees, agents, consultants, or subcontractors of each and any of them, and that the insured is allowed to waive the insurer's rights of subrogation in a written contract executed prior to the loss, damage, or consequential loss.

~~1. Owner waives all rights against Contractor, Subcontractors, and Engineer, and the officers, directors, members, partners, employees, agents, consultants and subcontractors of each and any of them, for all losses and damages caused by, arising out of, or resulting from fire or any of the perils, risks, or causes of loss covered by such policies.~~

~~C. The waivers in this Paragraph 6.05 include the waiver of rights due to business interruption, loss of use, or other consequential loss extending beyond direct physical loss or damage to Owner's property or the Work caused by, arising out of, or resulting from fire or other insured peril, risk, or cause of loss.~~

~~D~~ C. Contractor shall be responsible for assuring that each Subcontract contains provisions whereby the Subcontractor waives all rights against Owner, Contractor, all individuals or entities identified in the Supplementary Conditions as insureds, the Engineer and its consultants, and the officers, directors, members, partners, employees, agents, consultants, and subcontractors of each and any of them, for all losses and damages caused by, arising out of, relating to, or resulting from fire or other peril, risk, or cause of loss covered by builder's risk insurance, installation floater, and any other property insurance applicable to the Work.

6.06 *Receipt and Application of Property Insurance Proceeds*

A. Any insured loss under the builder's risk and other policies of property insurance required by Paragraph 6.04 will be adjusted and settled with the named insured that purchased the policy. Such named insured shall act as fiduciary for the other insureds, and give notice to such other insureds that adjustment and settlement of a claim is in progress. Any other insured may state its position regarding a claim for insured loss in writing within 15 days after notice of such claim.

B. Proceeds for such insured losses may be made payable by the insurer either jointly to multiple insureds, or to the named insured that purchased the policy in its own right and as fiduciary for other insureds, subject to the requirements of any applicable mortgage clause. A named insured receiving insurance proceeds under the builder's risk and other policies of insurance required by Paragraph 6.04 shall maintain such proceeds in a segregated account, and distribute such proceeds in accordance with such agreement as the parties in interest may

reach, or as otherwise required under the dispute resolution provisions of this Contract or applicable Laws and Regulations.

C. If no other special agreement is reached, Contractor shall repair or replace the damaged Work, using allocated insurance proceeds.

ARTICLE 7—CONTRACTOR'S RESPONSIBILITIES

7.01 *Contractor's Means and Methods of Construction*

A. Contractor shall be solely responsible for the means, methods, techniques, sequences, and procedures of construction.

B. If the Contract Documents note, or Contractor determines, that professional engineering or other design services are needed to carry out Contractor's responsibilities for construction means, methods, techniques, sequences, and procedures, or for Site safety, then Contractor shall cause such services to be provided by a properly licensed design professional, at Contractor's expense. Such services are not Owner-delegated professional design services under this Contract, and neither Owner nor Engineer has any responsibility with respect to (1) Contractor's determination of the need for such services, (2) the qualifications or licensing of the design professionals retained or employed by Contractor, (3) the performance of such services, or (4) any errors, omissions, or defects in such services.

7.02 *Supervision and Superintendence*

A. Contractor shall supervise, inspect, and direct the Work competently and efficiently, devoting such attention thereto and applying such skills and expertise as may be necessary to perform the Work in accordance with the Contract Documents.

B. At all times during the progress of the Work, Contractor shall assign a competent resident superintendent who will not be replaced without written notice to Owner and Engineer except under extraordinary circumstances.

<u>For purposes of giving or receiving notice, directives, Change Orders, or any other information from Engineer or Owner to Contractor, the Contractor shall designate one person as Project Manager to receive such notice directives, Change Orders, or other information. If the person so identified by Contractor is not present on the job Site during normal working hours for any consecutive 48 hour period, the Contractor shall in writing, addressed to Engineer and Owner identify the individual who is acting as Project Manager. Contractor may designate the resident superintendent as the Project Manager.</u>

7.03 *Labor; Working Hours*

A. Contractor shall provide competent, suitably qualified personnel to survey and lay out the Work and perform construction as required by the Contract Documents. Contractor shall maintain good discipline and order at the Site.

B. Contractor shall be fully responsible to Owner and Engineer for all acts and omissions of Contractor's employees; of Suppliers and Subcontractors, and their employees; and of any other individuals or entities performing or furnishing any of the Work, just as Contractor is responsible for Contractor's own acts and omissions.

C. Except as otherwise required for the safety or protection of persons or the Work or property at the Site or adjacent thereto, and except as otherwise stated in the Contract Documents, all Work at the Site will be performed during regular working hours, Monday through Friday. Contractor will not permit overtime work or perform Work on a Saturday, Sunday, or any legal holiday. Contractor may perform Work outside regular working hours or on Saturdays, Sundays, or legal holidays only with Owner's written consent, which will not be unreasonably withheld. For purposes of the foregoing sentence and this Contract "regular working hours" shall mean between 7:00 a.m. and 6:00 p.m. Emergency work may be performed without prior permission. Contractor shall establish a normal work schedule which does not exceed 40 hours per week. Overtime shall be scheduled only after Contractor obtains written permission from Owner.

7.04 *Services, Materials, and Equipment*

A. Unless otherwise specified in the Contract Documents, Contractor shall provide and assume full responsibility for all services, materials, equipment, labor, transportation, construction equipment and machinery, tools, appliances, fuel, power, light, heat, telephone, water, sanitary facilities, temporary facilities, and all other facilities and incidentals necessary for the performance, testing, start up, and completion of the Work, whether or not such items are specifically called for in the Contract Documents.

B. All materials and equipment incorporated into the Work must be new and of good quality, except as otherwise provided in the Contract Documents. All special warranties and guarantees required by the Specifications will expressly run to the benefit of Owner. If required by Engineer, Contractor shall furnish satisfactory evidence (including reports of required tests) as to the source, kind, and quality of materials and equipment.

C. All materials and equipment must be stored, applied, installed, connected, erected, protected, used, cleaned, and conditioned in accordance with instructions of the applicable Supplier, except as otherwise may be provided in the Contract Documents.

D. The Contractor agrees to assign to the Owner at the time of final completion of the Work any and all manufacturer's warranties relating to equipment, machinery, materials and labor used and incorporated in the Work and Contractor further agrees to perform the Work in such a manner to preserve any and all manufacturer's warranties.

7.05 *"Or Equals"*

A. *Contractor's Request; Governing Criteria*: Whenever an item of equipment or material is specified or described in the Contract Documents by using the names of one or more proprietary items or specific Suppliers, the Contract Price has been based upon Contractor furnishing such item as specified. The specification or description of such an item is intended to establish the type, function, appearance, and quality required. Unless the specification or description contains or is followed by words reading that no like, equivalent, or "or equal" item is permitted, Contractor may request that Engineer authorize the use of other items of equipment or material, or items from other proposed Suppliers, under the circumstances described below.

1. If Engineer in its sole discretion determines that an item of equipment or material proposed by Contractor is functionally equal to that named and sufficiently similar so that no change in related Work will be required, Engineer will deem it an "or equal" item. For

the purposes of this paragraph, a proposed item of equipment or material will be considered functionally equal to an item so named if:

a. in the exercise of reasonable judgment Engineer determines that the proposed item:

1) is at least equal in materials of construction, quality, durability, appearance, strength, and design characteristics;

2) will reliably perform at least equally well the function and achieve the results imposed by the design concept of the completed Project as a functioning whole;

3) has a proven record of performance and availability of responsive service; and

4) is not objectionable to Owner.

b. Contractor certifies that, if the proposed item is approved and incorporated into the Work:

1) there will be no increase in cost to the Owner or increase in Contract Times; and

2) the item will conform substantially to the detailed requirements of the item named in the Contract Documents.

B. *Contractor's Expense*: Contractor shall provide all data in support of any proposed "or equal" item at Contractor's expense.

C. *Engineer's Evaluation and Determination*: Engineer will be allowed a reasonable time to evaluate each "or-equal" request. Engineer may require Contractor to furnish additional data about the proposed "or-equal" item. Engineer will be the sole judge of acceptability. No "or-equal" item will be ordered, furnished, installed, or utilized until Engineer's review is complete and Engineer determines that the proposed item is an "or-equal," which will be evidenced by an approved Shop Drawing or other written communication. Engineer will advise Contractor in writing of any negative determination.

D. *Effect of Engineer's Determination*: Neither approval nor denial of an "or-equal" request will result in any change in Contract Price. The Engineer's denial of an "or-equal" request will be final and binding, and may not be reversed through an appeal under any provision of the Contract.

E. *Treatment as a Substitution Request*: If Engineer determines that an item of equipment or material proposed by Contractor does not qualify as an "or-equal" item, Contractor may request that Engineer consider the item a proposed substitute pursuant to Paragraph 7.06.

7.06 *Substitutes*

A. *Contractor's Request; Governing Criteria*: Unless the specification or description of an item of equipment or material required to be furnished under the Contract Documents contains or is followed by words reading that no substitution is permitted, Contractor may request that Engineer authorize the use of other items of equipment or material under the circumstances described below. To the extent possible such requests must be made before commencement of related construction at the Site.

1. Contractor shall submit sufficient information as provided below to allow Engineer to determine if the item of material or equipment proposed is functionally equivalent to that named and an acceptable substitute therefor. Engineer will not accept requests for

review of proposed substitute items of equipment or material from anyone other than Contractor.

2. The requirements for review by Engineer will be as set forth in Paragraph 7.06.B, as supplemented by the Specifications, and as Engineer may decide is appropriate under the circumstances.

3. Contractor shall make written application to Engineer for review of a proposed substitute item of equipment or material that Contractor seeks to furnish or use. The application:

   a. will certify that the proposed substitute item will:

      1) perform adequately the functions and achieve the results called for by the general design;

      2) be similar in substance to the item specified; and

      3) be suited to the same use as the item specified.

   b. will state:

      1) the extent, if any, to which the use of the proposed substitute item will necessitate a change in Contract Times;

      2) whether use of the proposed substitute item in the Work will require a change in any of the Contract Documents (or in the provisions of any other direct contract with Owner for other work on the Project) to adapt the design to the proposed substitute item; and

      3) whether incorporation or use of the proposed substitute item in connection with the Work is subject to payment of any license fee or royalty.

   c. will identify:

      1) all variations of the proposed substitute item from the item specified; and

      2) available engineering, sales, maintenance, repair, and replacement services.

   d. will contain an itemized estimate of all costs or credits that will result directly or indirectly from use of such substitute item, including but not limited to changes in Contract Price, shared savings, costs of redesign, and claims of other contractors affected by any resulting change.

B. *Engineer's Evaluation and Determination*: Engineer will be allowed a reasonable time to evaluate each substitute request, and to obtain comments and direction from Owner. Engineer may require Contractor to furnish additional data about the proposed substitute item. Engineer will be the sole judge of acceptability. No substitute will be ordered, furnished, installed, or utilized until Engineer's review is complete and Engineer determines that the proposed item is an acceptable substitute. Engineer's determination will be evidenced by a Field Order or a proposed Change Order accounting for the substitution itself and all related impacts, including changes in Contract Price or Contract Times. Engineer will advise Contractor in writing of any negative determination.

C. *Special Guarantee*: Owner may require Contractor to furnish at Contractor's expense a special performance guarantee or other surety with respect to any substitute.

D. *Reimbursement of Engineer's Cost*: Engineer will record Engineer's costs in evaluating a substitute proposed or submitted by Contractor. Whether or not Engineer approves a substitute so proposed or submitted by Contractor, Contractor shall reimburse Owner for the reasonable charges of Engineer for evaluating each such proposed substitute. Contractor shall also reimburse Owner for the reasonable charges of Engineer for making changes in the Contract Documents (or in the provisions of any other direct contract with Owner) resulting from the acceptance of each proposed substitute.

E. *Contractor's Expense*: Contractor shall provide all data in support of any proposed substitute at Contractor's expense.

F. *Effect of Engineer's Determination*: If Engineer approves the substitution request, Contractor shall execute the proposed Change Order and proceed with the substitution. The Engineer's denial of a substitution request will be final and binding, and may not be reversed through an appeal under any provision of the Contract. Contractor may challenge the scope of reimbursement costs imposed under Paragraph 7.06.D, by timely submittal of a Change Proposal.

7.07 *Concerning Subcontractors and Suppliers*

A. Contractor may retain Subcontractors and Suppliers for the performance of parts of the Work. Such Subcontractors and Suppliers must be acceptable to Owner. The Contractor's retention of a Subcontractor or Supplier for the performance of parts of the Work will not relieve Contractor's obligation to Owner to perform and complete the Work in accordance with the Contract Documents.

B. Contractor shall retain specific Subcontractors and Suppliers for the performance of designated parts of the Work if required by the Contract to do so.

C. Subsequent to the submittal of Contractor's Bid or final negotiation of the terms of the Contract, Owner may not require Contractor to retain any Subcontractor or Supplier to furnish or perform any of the Work against which Contractor has reasonable objection.

D. Prior to entry into any binding subcontract or purchase order, Contractor shall submit to Owner the identity of the proposed Subcontractor or Supplier (unless Owner has already deemed such proposed Subcontractor or Supplier acceptable during the bidding process or otherwise)~~. Such proposed Subcontractor or Supplier shall be deemed acceptable to Owner unless Owner raises a substantive, reasonable objection within 5 days.~~

E. Owner may require the replacement of any Subcontractor or Supplier. Owner also may require Contractor to retain specific replacements; provided, however, that Owner may not require a replacement to which Contractor has a reasonable objection. If Contractor has submitted the identity of certain Subcontractors or Suppliers for acceptance by Owner, and Owner has accepted it ~~(either in writing or by failing to make written objection thereto)~~, then Owner may subsequently revoke the acceptance of any such Subcontractor or Supplier so identified solely on the basis of substantive, reasonable objection after due investigation. Contractor shall submit an acceptable replacement for the rejected Subcontractor or Supplier.

F. If Owner requires the replacement of any Subcontractor or Supplier retained by Contractor to perform any part of the Work, then Contractor shall be entitled to an adjustment in Contract Price or Contract Times, with respect to the replacement; and Contractor shall

initiate a Change Proposal for such adjustment within 30 days of Owner's requirement of replacement.

G. No acceptance by Owner of any such Subcontractor or Supplier, whether initially or as a replacement, will constitute a waiver of the right of Owner to the completion of the Work in accordance with the Contract Documents.

H. At the request of Owner, ~~on a monthly basis,~~ Contractor shall submit to Engineer a complete list of all Subcontractors and Suppliers having a direct contract with Contractor, and of all other Subcontractors and Suppliers known to Contractor at the time of submittal.

Contractor shall be fully responsible to Owner for all acts and omissions of the Subcontractors, Suppliers, and other individuals or entities performing or furnishing any of the Work just as Contractor is responsible for Contractor's own acts and omissions. Nothing in the Contract Documents shall create for the benefit of any such Subcontractor, Supplier, or other individual or entity any contractual relationship between Owner and any such Subcontractor, Supplier or other individual or entity, nor shall it create any obligation on the part of Owner to pay or to see to the payment of any moneys due any such Subcontractor, Supplier, or other individual or entity except as may otherwise be required by Laws and Regulations.

I. Contractor shall be solely responsible for scheduling and coordinating the work of Subcontractors and Suppliers.

J. The divisions and sections of the Specifications and the identifications of any Drawings do not control Contractor in dividing the Work among Subcontractors or Suppliers, or in delineating the Work to be performed by any specific trade.

K. All Work performed for Contractor by a Subcontractor or Supplier must be pursuant to an appropriate contractual agreement that specifically binds the Subcontractor or Supplier to the applicable terms and conditions of the Contract for the benefit of Owner and Engineer.

L. Owner may furnish to any Subcontractor or Supplier, to the extent practicable, information about amounts paid to Contractor for Work performed for Contractor by the Subcontractor or Supplier.

M. Contractor shall restrict all Subcontractors and Suppliers from communicating with Engineer or Owner, except through Contractor or in case of an emergency, or as otherwise expressly allowed in this Contract.

7.08 *Patent Fees and Royalties*

A. Contractor shall pay all license fees and royalties and assume all costs incident to the use in the performance of the Work or the incorporation in the Work of any invention, design, process, product, or device which is the subject of patent rights or copyrights held by others. If an invention, design, process, product, or device is specified in the Contract Documents for use in the performance of the Work and if, to the actual knowledge of Owner or Engineer, its use is subject to patent rights or copyrights calling for the payment of any license fee or royalty to others, the existence of such rights will be disclosed in the Contract Documents.

~~B. To the fullest extent permitted by Laws and Regulations, Owner shall indemnify and hold harmless Contractor, and its officers, directors, members, partners, employees, agents, consultants, and subcontractors, from and against all claims, costs, losses, and damages (including but not limited to all fees and charges of engineers, architects, attorneys, and other professionals, and all court or arbitration or other dispute resolution costs) arising out of or~~

~~relating to any infringement of patent rights or copyrights incident to the use in the performance of the Work or resulting from the incorporation in the Work of any invention, design, process, product, or device specified in the Contract Documents, but not identified as being subject to payment of any license fee or royalty to others required by patent rights or copyrights~~.

~~C~~ B. To the fullest extent permitted by Laws and Regulations, Contractor shall indemnify and hold harmless Owner and Engineer, and the officers, directors, members, partners, employees, agents, consultants and subcontractors of each and any of them, from and against all claims, costs, losses, and damages (including but not limited to all fees and charges of engineers, architects, attorneys, and other professionals and all court or arbitration or other dispute resolution costs) arising out of or relating to any infringement of patent rights or copyrights incident to the use in the performance of the Work or resulting from the incorporation in the Work of any invention, design, process, product, or device not specified in the Contract Documents.

7.09 *Permits*

A. Unless otherwise provided in the Contract Documents, Contractor shall obtain and pay for all construction permits, licenses, and certificates of occupancy. Owner shall assist Contractor, when necessary, in obtaining such permits and licenses. Contractor shall pay all governmental charges and inspection fees necessary for the prosecution of the Work which are applicable at the time of the submission of Contractor's Bid (or when Contractor became bound under a negotiated contract). Owner shall pay all charges of utility owners for connections for providing permanent service to the Work.

7.10 *Taxes*

A. Contractor shall pay all sales, consumer, use, and other similar taxes required to be paid by Contractor in accordance with the Laws and Regulations of the place of the Project which are applicable during the performance of the Work. Parish may designate Contractor as its agent for the purpose of making sales tax exempt purchases on behalf of Jefferson Parish; such project shall be designated sales tax exempt in a Resolution adopted by the Jefferson Parish Council.

B. Owner is exempt from payment of sales and compensating use taxes of the State of Louisiana and of cities and counties thereof on all materials to be incorporated into the Work when a Project is designated as tax exempt by the Jefferson Parish Council.

1. Owner will furnish the required certificates of tax exemption to Contractor for use in the purchase of supplies and materials to be incorporated into the Work.

2. Owner's exemption does not apply to construction tools, machinery, equipment, or other property purchased by or leased by Contractor, or to supplies or materials not incorporated into the Work.

7.11 *Laws and Regulations*

A. Contractor shall give all notices required by and shall comply with all Laws and Regulations applicable to the performance of the Work. Neither Owner nor Engineer shall be responsible for monitoring Contractor's compliance with any Laws or Regulations.

B. If Contractor performs any Work or takes any other action knowing or having reason to know that it is contrary to Laws or Regulations, Contractor shall bear all resulting costs and losses,

and shall indemnify and hold harmless Owner and Engineer, and the officers, directors, members, partners, employees, agents, consultants, and subcontractors of each and any of them, from and against all claims, costs, losses, and damages (including but not limited to all fees and charges of engineers, architects, attorneys, and other professionals and all court or arbitration or other dispute resolution costs) arising out of or relating to such Work or other action. It is not Contractor's responsibility to make certain that the Work described in the Contract Documents is in accordance with Laws and Regulations, but this does not relieve Contractor of its obligations under Paragraph 3.03.

C. Owner or Contractor may give written notice to the other party of any changes after the submission of Contractor's Bid (or after the date when Contractor became bound under a negotiated contract) in Laws or Regulations having an effect on the cost or time of performance of the Work, including but not limited to changes in Laws or Regulations having an effect on procuring permits and on sales, use, value-added, consumption, and other similar taxes. If Owner and Contractor are unable to agree on entitlement to or on the amount or extent, if any, of any adjustment in Contract Price or Contract Times resulting from such changes, then within 30 days of such written notice Contractor may submit a Change Proposal, or Owner may initiate a Claim.

D. Pursuant to La. R.S. 38:2196, with respect to public contracts involving the state or a political subdivision of the state, when the Work is to be done in this state (Louisiana), or the services are to be provided or the materials are to be supplied in this state, provisions in such agreements requiring disputes arising thereunder to be resolved in a forum outside of this state or requiring their interpretation to be governed by the laws of another jurisdiction are inequitable and against the public policy of this state.

7.12 *Record Documents*

A. Contractor shall maintain in a safe place at the Site one printed record copy of all Drawings, Specifications, Addenda, Change Orders, Work Change Directives, Field Orders, written interpretations and clarifications, and approved Shop Drawings. Contractor shall keep such record documents in good order and annotate them to show changes made during construction. These record documents, together with all approved Samples, will be available to Engineer for reference. Upon completion of the Work, Contractor shall deliver these record documents to Engineer.

7.13 *Safety and Protection*

A. Contractor shall be solely responsible for initiating, maintaining, and supervising all safety precautions and programs in connection with the Work. Such responsibility does not relieve Subcontractors of their responsibility for the safety of persons or property in the performance of their work, nor for compliance with applicable safety Laws and Regulations.

B. Contractor shall designate a qualified and experienced safety representative whose duties and responsibilities are the prevention of Work-related accidents and the maintenance and supervision of safety precautions and programs.

C. Contractor shall take all necessary precautions for the safety of, and shall provide the necessary protection to prevent damage, injury, or loss to:

1. all persons on the Site or who may be affected by the Work;

2. all the Work and materials and equipment to be incorporated therein, whether in storage on or off the Site; and

3. other property at the Site or adjacent thereto, including trees, shrubs, lawns, walks, pavements, roadways, structures, other work in progress, utilities, and Underground Facilities not designated for removal, relocation, or replacement in the course of construction.

D. All damage, injury, or loss to any property referred to in Paragraph 7.13.C.2 or 7.13.C.3 caused, directly or indirectly, in whole or in part, by Contractor, any Subcontractor, Supplier, or any other individual or entity directly or indirectly employed by any of them to perform any of the Work, or anyone for whose acts any of them may be liable, shall be remedied by Contractor at its expense (except damage or loss attributable to the fault of Drawings or Specifications or to the acts or omissions of Owner or Engineer or anyone employed by any of them, or anyone for whose acts any of them may be liable, and not attributable, directly or indirectly, in whole or in part, to the fault or negligence of Contractor or any Subcontractor, Supplier, or other individual or entity directly or indirectly employed by any of them).

E. Contractor shall comply with all applicable Laws and Regulations relating to the safety of persons or property, or to the protection of persons or property from damage, injury, or loss; and shall erect and maintain all necessary safeguards for such safety and protection.

F. Contractor shall notify Owner; the owners of adjacent property; the owners of Underground Facilities and other utilities (if the identity of such owners is known to Contractor); and other contractors and utility owners performing work at or adjacent to the Site, in writing, when Contractor knows that prosecution of the Work may affect them, and shall cooperate with them in the protection, removal, relocation, and replacement of their property or work in progress.

G. Contractor shall comply with the applicable requirements of Owner's safety programs, if any. ~~Any Owner's safety programs that are applicable to the Work are identified or included in the Supplementary Conditions or Specifications~~.

H. Contractor shall inform Owner and Engineer of the specific requirements of Contractor's safety program with which Owner's and Engineer's employees and representatives must comply while at the Site.

I. Contractor's duties and responsibilities for safety and protection will continue until all the Work is completed, Engineer has issued a written notice to Owner and Contractor in accordance with Paragraph 15.06.C that the Work is acceptable, and Contractor has left the Site (except as otherwise expressly provided in connection with Substantial Completion).

J. Contractor's duties and responsibilities for safety and protection will resume whenever Contractor or any Subcontractor or Supplier returns to the Site to fulfill warranty or correction obligations, or to conduct other tasks arising from the Contract Documents.

7.14 *Hazard Communication Programs*

A. Contractor shall be responsible for coordinating any exchange of safety data sheets (formerly known as material safety data sheets) or other hazard communication information required to be made available to or exchanged between or among employers at the Site in accordance with Laws or Regulations.

7.15 *Emergencies*

A. In emergencies affecting the safety or protection of persons or the Work or property at the Site or adjacent thereto, Contractor is obligated to act to prevent damage, injury, or loss. Contractor shall give Engineer ~~prompt written~~ notice immediately but in no event more than 24 hours after the alleged emergency if Contractor believes that any significant changes in the Work or variations from the Contract Documents have been caused by an emergency, or are required as a result of Contractor's response to an emergency. If Engineer determines that a change in the Contract Documents is required because of an emergency or Contractor's response, a Work Change Directive or Change Order will be issued.

7.16 *Submittals*

A. *Shop Drawing and Sample Requirements*

1. Before submitting a Shop Drawing or Sample, Contractor shall:

a. review and coordinate the Shop Drawing or Sample with other Shop Drawings and Samples and with the requirements of the Work and the Contract Documents;

b. determine and verify:

1) all field measurements, quantities, dimensions, specified performance and design criteria, installation requirements, materials, catalog numbers, and similar information with respect to the Submittal;

2) the suitability of all materials and equipment offered with respect to the indicated application, fabrication, shipping, handling, storage, assembly, and installation pertaining to the performance of the Work; and

3) all information relative to Contractor's responsibilities for means, methods, techniques, sequences, and procedures of construction, and safety precautions and programs incident thereto;

c. confirm that the Submittal is complete with respect to all related data included in the Submittal.

2. Each Shop Drawing or Sample must bear a stamp or specific written certification that Contractor has satisfied Contractor's obligations under the Contract Documents with respect to Contractor's review of that Submittal, and that Contractor approves the Submittal.

3. With each Shop Drawing or Sample, Contractor shall give Engineer specific written notice of any variations that the Submittal may have from the requirements of the Contract Documents. This notice must be set forth in a written communication separate from the Submittal; and, in addition, in the case of a Shop Drawing by a specific notation made on the Shop Drawing itself.

B. *Submittal Procedures for Shop Drawings and Samples*: Contractor shall label and submit Shop Drawings and Samples to Engineer for review and approval in accordance with the accepted Schedule of Submittals.

1. *Shop Drawings*

a. Contractor shall submit the number of copies required in the Specifications.

b. Data shown on the Shop Drawings must be complete with respect to quantities, dimensions, specified performance and design criteria, materials, and similar data to show Engineer the services, materials, and equipment Contractor proposes to provide, and to enable Engineer to review the information for the limited purposes required by Paragraph 7.16.C.

2. *Samples*

a. Contractor shall submit the number of Samples required in the Specifications.

b. Contractor shall clearly identify each Sample as to material, Supplier, pertinent data such as catalog numbers, the use for which intended and other data as Engineer may require to enable Engineer to review the Submittal for the limited purposes required by Paragraph 7.16.C.

3. Where a Shop Drawing or Sample is required by the Contract Documents or the Schedule of Submittals, any related Work performed prior to Engineer's review and approval of the pertinent submittal will be at the sole expense and responsibility of Contractor.

C. *Engineer's Review of Shop Drawings and Samples*

1. Engineer will provide timely review of Shop Drawings and Samples in accordance with the accepted Schedule of Submittals. Engineer's review and approval will be only to determine if the items covered by the Submittals will, after installation or incorporation in the Work, comply with the requirements of the Contract Documents, and be compatible with the design concept of the completed Project as a functioning whole as indicated by the Contract Documents.

2. Engineer's review and approval will not extend to means, methods, techniques, sequences, or procedures of construction, or to safety precautions or programs incident thereto.

3. Engineer's review and approval of a separate item as such will not indicate approval of the assembly in which the item functions.

4. Engineer's review and approval of a Shop Drawing or Sample will not relieve Contractor from responsibility for any variation from the requirements of the Contract Documents unless Contractor has complied with the requirements of Paragraph 7.16.A.3 and Engineer has given written approval of each such variation by specific written notation thereof incorporated in or accompanying the Shop Drawing or Sample. Engineer will document any such approved variation from the requirements of the Contract Documents in a Field Order or other appropriate Contract modification.

5. Engineer's review and approval of a Shop Drawing or Sample will not relieve Contractor from responsibility for complying with the requirements of Paragraphs 7.16.A and B.

6. Engineer's review and approval of a Shop Drawing or Sample, or of a variation from the requirements of the Contract Documents, will not, under any circumstances, change the Contract Times or Contract Price, unless such changes are included in a Change Order.

7. Neither Engineer's receipt, review, acceptance, or approval of a Shop Drawing or Sample will result in such item becoming a Contract Document.

8. Contractor shall perform the Work in compliance with the requirements and commitments set forth in approved Shop Drawings and Samples, subject to the provisions of Paragraph 7.16.C.4.

D. *Resubmittal Procedures for Shop Drawings and Samples*

1. Contractor shall make corrections required by Engineer and shall return the required number of corrected copies of Shop Drawings and submit, as required, new Samples for review and approval. Contractor shall direct specific attention in writing to revisions other than the corrections called for by Engineer on previous Submittals.

2. Contractor shall furnish required Shop Drawing and Sample submittals with sufficient information and accuracy to obtain required approval of an item with no more than two resubmittals. Engineer will record Engineer's time for reviewing a third or subsequent resubmittal of a Shop Drawing or Sample, and Contractor shall be responsible for Engineer's charges to Owner for such time. Owner may impose a set-off against payments due Contractor to secure reimbursement for such charges.

3. If Contractor requests a change of a previously approved Shop Drawing or Sample, Contractor shall be responsible for Engineer's charges to Owner for its review time, and Owner may impose a set-off against payments due Contractor to secure reimbursement for such charges, unless the need for such change is beyond the control of Contractor.

E. *Submittals Other than Shop Drawings, Samples, and Owner-Delegated Designs*

1. The following provisions apply to all Submittals other than Shop Drawings, Samples, and Owner-delegated designs:

   a. Contractor shall submit all such Submittals to the Engineer in accordance with the Schedule of Submittals and pursuant to the applicable terms of the Contract Documents.

   b. Engineer will provide timely review of all such Submittals in accordance with the Schedule of Submittals and return such Submittals with a notation of either Accepted or Not Accepted. Any such Submittal that is not returned within the time established in the Schedule of Submittals will be deemed accepted.

   c. Engineer's review will be only to determine if the Submittal is acceptable under the requirements of the Contract Documents as to general form and content of the Submittal.

   d. If any such Submittal is not accepted, Contractor shall confer with Engineer regarding the reason for the non-acceptance, and resubmit an acceptable document.

2. Procedures for the submittal and acceptance of the Progress Schedule, the Schedule of Submittals, and the Schedule of Values are set forth in Paragraphs 2.03. 2.04, and 2.05.

F. Owner-delegated Designs: Submittals pursuant to Owner-delegated designs are governed by the provisions of Paragraph 7.19.

7.17 *Contractor's General Warranty and Guarantee*

A. Contractor warrants and guarantees to Owner that all Work will be in accordance with the Contract Documents and will not be defective. Engineer is entitled to rely on Contractor's warranty and guarantee.

B. Owner's rights under this warranty and guarantee are in addition to, and are not limited by, Owner's rights under the correction period provisions of Paragraph 15.08. The time in which Owner may enforce its warranty and guarantee rights under this Paragraph 7.17 is limited only by applicable Laws and Regulations restricting actions to enforce such rights; provided, however, that after the end of the correction period under Paragraph 15.08:

1. Owner shall give Contractor written notice of any defective Work within 60 days of the discovery that such Work is defective; and

2. Such notice will be deemed the start of an event giving rise to a Claim under Paragraph 12.01.B, such that any related Claim must be brought within 30 days of the notice.

C. Contractor's warranty and guarantee hereunder excludes defects or damage caused by:

1. abuse, or improper modification, maintenance, or operation, by persons other than Contractor, Subcontractors, Suppliers, or any other individual or entity for whom Contractor is responsible; or

2. normal wear and tear under normal usage.

D. Contractor's obligation to perform and complete the Work in accordance with the Contract Documents is absolute. None of the following will constitute an acceptance of Work that is not in accordance with the Contract Documents, a release of Contractor's obligation to perform the Work in accordance with the Contract Documents, or a release of Owner's warranty and guarantee rights under this Paragraph 7.17:

1. Observations by Engineer;

2. Recommendation by Engineer or payment by Owner of any progress or final payment;

3. The issuance of a certificate of Substantial Completion by Engineer or any payment related thereto by Owner;

4. Use or occupancy of the Work or any part thereof by Owner;

5. Any review and approval of a Shop Drawing or Sample submittal;

6. The issuance of a notice of acceptability by Engineer;

7. The end of the correction period established in Paragraph 15.08;

8. Any inspection, test, or approval by others; or

9. Any correction of defective Work by Owner.

E. If the Contract requires the Contractor to accept the assignment of a contract entered into by Owner, then the specific warranties, guarantees, and correction obligations contained in the assigned contract will govern with respect to Contractor's performance obligations to Owner for the Work described in the assigned contract.

7.18 *Indemnification*

A. To the fullest extent permitted by Laws and Regulations, and in addition to any other obligations of Contractor under the Contract or otherwise, Contractor shall indemnify, defend, and hold harmless Owner ~~and Engineer, and the officers, directors, members, partners, employees, agents, consultants and subcontractors of each and any of them (collectively the "Indemnitees")~~, from any and all losses, damages, costs, and judgments

(including, but not limited to, all reasonable fees and charges of engineers, architects, attorneys, and other professionals, ~~and~~ all court or arbitration or other dispute resolution costs, and all reasonable fees and charges incurred in establishing the right to indemnity pursuant to the provisions in this section) arising from third-party claims or actions relating to or resulting from the performance or furnishing of the Work, provided that any such claim, action, loss, cost, judgment or damage is attributable to bodily injury, sickness, disease, or death, or to damage to or destruction of tangible property (other than the Work itself), including the loss of use resulting therefrom, but only to the extent caused by any negligent or intentional act or omission of Contractor, any Subcontractor, any Supplier, or any individual or entity directly or indirectly employed by any of them to perform any of the Work, or anyone for whose acts any of them may be liable.

Pursuant to La. R.S. 9:2780.1 and Article 6.02 of the General Conditions, Contractor acknowledges that Contractor is required to obtain insurance for the purpose of insuring its obligation to indemnity, defend, and hold harmless the Indemnitees as described above, and Contractor acknowledges that Contractor has recovered the cost of such insurance in the Contract Price.

B. In any and all claims against Owner or Engineer, or any of their officers, directors, members, partners, employees, agents, consultants, or subcontractors, by any employee (or the survivor or personal representative of such employee) of Contractor, any Subcontractor, any Supplier, or any individual or entity directly or indirectly employed by any of them to perform any of the Work, or anyone for whose acts any of them may be liable, the indemnification obligation under Paragraph 7.18.A will not be limited in any way by any limitation on the amount or type of damages, compensation, or benefits payable by or for Contractor or any such Subcontractor, Supplier, or other individual or entity under workers' compensation acts, disability benefit acts, or other employee benefit acts.

7.19 *Delegation of Professional Design Services*

A. Owner may require Contractor to provide professional design services for a portion of the Work by express delegation in the Contract Documents. Such delegation will specify the performance and design criteria that such services must satisfy, and the Submittals that Contractor must furnish to Engineer with respect to the Owner-delegated design.

B. Contractor shall cause such Owner-delegated professional design services to be provided pursuant to the professional standard of care by a properly licensed design professional, whose signature and seal must appear on all drawings, calculations, specifications, certifications, and Submittals prepared by such design professional. Such design professional must issue all certifications of design required by Laws and Regulations.

C. If a Shop Drawing or other Submittal related to the Owner-delegated design is prepared by Contractor, a Subcontractor, or others for submittal to Engineer, then such Shop Drawing or other Submittal must bear the written approval of Contractor's design professional when submitted by Contractor to Engineer.

D. Owner and Engineer shall be entitled to rely upon the adequacy, accuracy, and completeness of the services, certifications, and approvals performed or provided by the design professionals retained or employed by Contractor under an Owner-delegated design, subject to the professional standard of care and the performance and design criteria stated in the Contract Documents.

E. Pursuant to this Paragraph 7.19, Engineer's review, approval, and other determinations regarding design drawings, calculations, specifications, certifications, and other Submittals furnished by Contractor pursuant to an Owner-delegated design will be only for the following limited purposes:

1. Checking for conformance with the requirements of this Paragraph 7.19;
2. Confirming that Contractor (through its design professionals) has used the performance and design criteria specified in the Contract Documents; and
3. Establishing that the design furnished by Contractor is consistent with the design concept expressed in the Contract Documents.

F. Contractor shall not be responsible for the adequacy of performance or design criteria specified by Owner or Engineer.

G. Contractor is not required to provide professional services in violation of applicable Laws and Regulations.

ARTICLE 8—OTHER WORK AT THE SITE

8.01 *Other Work*

A. In addition to and apart from the Work under the Contract Documents, the Owner may perform other work at or adjacent to the Site. Such other work may be performed by Owner's employees, or through contracts between the Owner and third parties. Owner may also arrange to have third-party utility owners perform work on their utilities and facilities at or adjacent to the Site.

B. If Owner performs other work at or adjacent to the Site with Owner's employees, or through contracts for such other work, then Owner shall give Contractor written notice thereof prior to starting any such other work. If Owner has advance information regarding the start of any third-party utility work that Owner has arranged to take place at or adjacent to the Site, Owner shall provide such information to Contractor.

C. Contractor shall afford proper and safe access to the Site to each contractor that performs such other work, each utility owner performing other work, and Owner, if Owner is performing other work with Owner's employees, and provide a reasonable opportunity for the introduction and storage of materials and equipment and the execution of such other work.

D. Contractor shall do all cutting, fitting, and patching of the Work that may be required to properly connect or otherwise make its several parts come together and properly integrate with such other work. Contractor shall not endanger any work of others by cutting, excavating, or otherwise altering such work; provided, however, that Contractor may cut or alter others' work with the written consent of Engineer and the others whose work will be affected.

E. If the proper execution or results of any part of Contractor's Work depends upon work performed by others, Contractor shall inspect such other work and promptly report to Engineer in writing any delays, defects, or deficiencies in such other work that render it unavailable or unsuitable for the proper execution and results of Contractor's Work. Contractor's failure to so report will constitute an acceptance of such other work as fit and

proper for integration with Contractor's Work except for latent defects and deficiencies in such other work.

F. The provisions of this article are not applicable to work that is performed by third-party utilities or other third-party entities without a contract with Owner, or that is performed without having been arranged by Owner. If such work occurs, then any related delay, disruption, or interference incurred by Contractor is governed by the provisions of Paragraph 4.05.C.3.

8.02 *Coordination*

A. If Owner intends to contract with others for the performance of other work at or adjacent to the Site, to perform other work at or adjacent to the Site with Owner's employees, or to arrange to have utility owners perform work at or adjacent to the Site, the following will be set forth in the Supplementary Conditions or provided to Contractor prior to the start of any such other work:

1. The identity of the individual or entity that will have authority and responsibility for coordination of the activities among the various contractors;

2. An itemization of the specific matters to be covered by such authority and responsibility; and

3. The extent of such authority and responsibilities.

B. Unless otherwise provided in the Supplementary Conditions, Owner shall have sole authority and responsibility for such coordination.

8.03 *Legal Relationships*

A. If, in the course of performing other work for Owner at or adjacent to the Site, the Owner's employees, any other contractor working for Owner, or any utility owner that Owner has arranged to perform work, causes damage to the Work or to the property of Contractor or its Subcontractors, or delays, disrupts, interferes with, or increases the scope or cost of the performance of the Work, through actions or inaction, then Contractor shall be entitled to an equitable adjustment in the Contract Price or the Contract Times. Contractor must submit any Change Proposal seeking an equitable adjustment in the Contract Price or the Contract Times under this paragraph within 30 days of the damaging, delaying, disrupting, or interfering event. The entitlement to, and extent of, any such equitable adjustment will take into account information (if any) regarding such other work that was provided to Contractor in the Contract Documents prior to the submittal of the Bid or the final negotiation of the terms of the Contract, and any remedies available to Contractor under Laws or Regulations concerning utility action or inaction. When applicable, any such equitable adjustment in Contract Price will be conditioned on Contractor assigning to Owner all Contractor's rights against such other contractor or utility owner with respect to the damage, delay, disruption, or interference that is the subject of the adjustment. Contractor's entitlement to an adjustment of the Contract Times or Contract Price is subject to the provisions of Paragraphs 4.05.D and 4.05.E.

B. Contractor shall take reasonable and customary measures to avoid damaging, delaying, disrupting, or interfering with the work of Owner, any other contractor, or any utility owner performing other work at or adjacent to the Site.

1. If Contractor fails to take such measures and as a result damages, delays, disrupts, or interferes with the work of any such other contractor or utility owner, then Owner may

impose a set-off against payments due Contractor, and assign to such other contractor or utility owner the Owner's contractual rights against Contractor with respect to the breach of the obligations set forth in this Paragraph 8.03.B.

2. When Owner is performing other work at or adjacent to the Site with Owner's employees, Contractor shall be liable to Owner for damage to such other work, and for the reasonable direct delay, disruption, and interference costs incurred by Owner as a result of Contractor's failure to take reasonable and customary measures with respect to Owner's other work. In response to such damage, delay, disruption, or interference, Owner may impose a set-off against payments due Contractor.

C. If Contractor damages, delays, disrupts, or interferes with the work of any other contractor, or any utility owner performing other work at or adjacent to the Site, through Contractor's failure to take reasonable and customary measures to avoid such impacts, or if any claim arising out of Contractor's actions, inactions, or negligence in performance of the Work at or adjacent to the Site is made by any such other contractor or utility owner against Contractor or Owner, ~~or Engineer,~~ then Contractor shall (1) promptly attempt to settle the claim as to all parties through negotiations with such other contractor or utility owner, or otherwise resolve the claim by ~~arbitration or other~~ a dispute resolution proceeding or at law, and (2) indemnify and hold harmless Owner ~~and Engineer, and the officers, directors, members, partners, employees, agents, consultants and subcontractors of each and any of them~~ from and against any such claims, and against all costs, losses, and damages (including but not limited to all fees and charges of engineers, architects, attorneys, and other professionals and all court or arbitration or other dispute resolution costs) arising out of or relating to such damage, delay, disruption, or interference.

ARTICLE 9—OWNER'S RESPONSIBILITIES

9.01 *Communications to Contractor*

A. Except as otherwise provided in these General Conditions, Owner shall issue all communications to Contractor through Engineer.

9.02 *Replacement of Engineer*

A. Owner may at its discretion appoint an engineer to replace Engineer ~~provided Contractor makes no reasonable objection to the replacement engineer~~. The replacement engineer's status under the Contract Documents will be that of the former Engineer.

9.03 *Furnish Data*

A. Owner shall promptly furnish the data required of Owner under the Contract Documents.

9.04 *Pay When Due*

A. Owner shall make payments to Contractor when they are due as provided in the Agreement.

9.05 *Lands and Easements; Reports, Tests, and Drawings*

A. Owner's duties with respect to providing lands and easements are set forth in Paragraph 5.01.

B. Owner's duties with respect to providing engineering surveys to establish reference points are set forth in Paragraph 4.03.

C. Article 5 refers to Owner's identifying and making available to Contractor copies of reports of explorations and tests of conditions at the Site, and drawings of physical conditions relating to existing surface or subsurface structures at the Site.

~~9.06 *Insurance*~~

~~A. Owner's responsibilities, if any, with respect to purchasing and maintaining liability and property insurance are set forth in Article 6.~~

9.06 *Change Orders*

A. Owner's responsibilities with respect to Change Orders are set forth in Article 11.

9.07 *Inspections, Tests, and Approvals*

A. Owner's responsibility with respect to certain inspections, tests, and approvals is set forth in Paragraph 14.02.B.

9.08 *Limitations on Owner's Responsibilities*

A. The Owner shall not supervise, direct, or have control or authority over, nor be responsible for, Contractor's means, methods, techniques, sequences, or procedures of construction, or the safety precautions and programs incident thereto, or for any failure of Contractor to comply with Laws and Regulations applicable to the performance of the Work. Owner will not be responsible for Contractor's failure to perform the Work in accordance with the Contract Documents.

9.09 *Undisclosed Hazardous Environmental Condition*

A. Owner's responsibility in respect to an undisclosed Hazardous Environmental Condition is set forth in Paragraph 5.06.

~~9.11 *Evidence of Financial Arrangements*~~

~~A. Upon request of Contractor, Owner shall furnish Contractor reasonable evidence that financial arrangements have been made to satisfy Owner's obligations under the Contract (including obligations under proposed changes in the Work).~~

9.10 NEW: *Safety Programs*

A. NEW: While at the Site, Owner's employees and representatives shall comply with the specific applicable requirements of Contractor's safety programs of which Owner has been informed.

ARTICLE 10—ENGINEER'S STATUS DURING CONSTRUCTION

10.01 *Owner's Representative*

A. Engineer will be Owner's representative during the construction period. The duties and responsibilities and the limitations of authority of Engineer as Owner's representative during construction are set forth in the Contract.

B. Engineer shall identify a specific individual to serve as liaison between Owner and Contractor and between Engineer and Contractor. Engineer will notify Owner and Contractor of the name of an acting replacement as Engineer representative whenever the person so designated is not available. Whenever the Contractor or Owner requires information, direction, or assistance, the Contractor or Owner shall notify the individual designated by Engineer.

10.02 *Visits to Site*

A. Engineer will make visits to the Site at intervals appropriate to the various stages of construction as Engineer deems necessary in order to observe, as an experienced and qualified design professional, the progress that has been made and the quality of the various aspects of Contractor's executed Work. Based on information obtained during such visits and observations, Engineer, for the benefit of Owner, will determine, in general, if the Work is proceeding in accordance with the Contract Documents. Engineer will not be required to make exhaustive or continuous inspections on the Site to check the quality or quantity of the Work. Engineer's efforts will be directed toward providing for Owner a greater degree of confidence that the completed Work will conform generally to the Contract Documents. On the basis of such visits and observations, Engineer will keep Owner informed of the progress of the Work and will endeavor to guard Owner against defective Work.

B. Engineer's visits and observations are subject to all the limitations on Engineer's authority and responsibility set forth in Paragraph 10.07. Particularly, but without limitation, during or as a result of Engineer's visits or observations of Contractor's Work, Engineer will not supervise, direct, control, or have authority over or be responsible for Contractor's means, methods, techniques, sequences, or procedures of construction, or the safety precautions and programs incident thereto, or for any failure of Contractor to comply with Laws and Regulations applicable to the performance of the Work.

10.03 *Resident Project Representative*

A. If Owner and Engineer have agreed that Engineer will furnish a Resident Project Representative to represent Engineer at the Site and assist Engineer in observing the progress and quality of the Work, then the authority and responsibilities of any such Resident Project Representative will be as provided in the Supplementary Conditions, and limitations on the responsibilities thereof will be as provided in the Supplementary Conditions and in Paragraph 10.07.

B. If Owner designates an individual or entity who is not Engineer's consultant, agent, or employee to represent Owner at the Site, then the responsibilities and authority of such individual or entity will be as provided in the Supplementary Conditions.

10.04 *Engineer's Authority*

A. Engineer has the authority to reject Work in accordance with Article 14.

B. Engineer's authority as to Submittals is set forth in Paragraph 7.16.

C. Engineer's authority as to design drawings, calculations, specifications, certifications and other Submittals from Contractor in response to Owner's delegation (if any) to Contractor of professional design services, is set forth in Paragraph 7.19.

D. Engineer's authority as to changes in the Work is set forth in Article 11.

E. Engineer's authority as to Applications for Payment is set forth in Article 15.

10.05 *Determinations for Unit Price Work*

A. Engineer will determine the actual quantities and classifications of Unit Price Work performed by Contractor as set forth in Paragraph 13.03.

10.06 *Decisions on Requirements of Contract Documents and Acceptability of Work*

A. Engineer will render decisions regarding the requirements of the Contract Documents, and judge the acceptability of the Work, pursuant to the specific procedures set forth herein for initial interpretations, Change Proposals, and acceptance of the Work. In rendering such decisions and judgments, Engineer will not show partiality to Owner or Contractor, and will not be liable to Owner, Contractor, or others in connection with any proceedings, interpretations, decisions, or judgments conducted or rendered in good faith.

10.07 *Limitations on Engineer's Authority and Responsibilities*

A. Neither Engineer's authority or responsibility under this Article 10 or under any other provision of the Contract, nor any decision made by Engineer in good faith either to exercise or not exercise such authority or responsibility or the undertaking, exercise, or performance of any authority or responsibility by Engineer, will create, impose, or give rise to any duty in contract, tort, or otherwise owed by Engineer to Contractor, any Subcontractor, any Supplier, any other individual or entity, or to any surety for or employee or agent of any of them.

B. Engineer will not supervise, direct, control, or have authority over or be responsible for Contractor's means, methods, techniques, sequences, or procedures of construction, or the safety precautions and programs incident thereto, or for any failure of Contractor to comply with Laws and Regulations applicable to the performance of the Work. Engineer will not be responsible for Contractor's failure to perform the Work in accordance with the Contract Documents.

C. Engineer will not be responsible for the acts or omissions of Contractor or of any Subcontractor, any Supplier, or of any other individual or entity performing any of the Work.

D. Engineer's review of the final Application for Payment and accompanying documentation, and all maintenance and operating instructions, schedules, guarantees, bonds, certificates of inspection, tests and approvals, and other documentation required to be delivered by Contractor under Paragraph 15.06.A, will only be to determine generally that their content complies with the requirements of, and in the case of certificates of inspections, tests, and approvals, that the results certified indicate compliance with the Contract Documents.

E. The limitations upon authority and responsibility set forth in this Paragraph 10.07 also apply to the Resident Project Representative, if any.

F. The duties, responsibilities, and limitations of authority of the Resident Project Representative are as further defined in the Supplementary Conditions and Exhibit A, which is attached thereto and incorporated therein by reference.

10.08 *Compliance with Safety Program*

A. While at the Site, Engineer's employees and representatives will comply with the specific applicable requirements of Owner's and Contractor's safety programs of which Engineer has been informed.

ARTICLE 11—CHANGES TO THE CONTRACT

11.01 *Amending and Supplementing the Contract*

A. The Contract may be amended or supplemented by a Change Order, a Work Change Directive, or a Field Order.

B. If an amendment or supplement to the Contract includes a change in the Contract Price or the Contract Times, such amendment or supplement must be set forth in a Change Order.

C. All changes to the Contract that involve (1) the performance or acceptability of the Work, (2) the design (as set forth in the Drawings, Specifications, or otherwise), or (3) other engineering or technical matters, must be supported by Engineer's recommendation. Owner and Contractor may amend other terms and conditions of the Contract without the recommendation of the Engineer.

11.02 *Change Orders*

A. Owner and Contractor shall execute appropriate Change Orders covering:

1. Changes in Contract Price or Contract Times which are agreed to by the parties, including any undisputed sum or amount of time for Work actually performed in accordance with a Work Change Directive;

2. Changes in Contract Price resulting from an Owner set-off, unless Contractor has duly contested such set-off;

3. Changes in the Work which are: (a) ordered by Owner pursuant to Paragraph 11.05, (b) required because of Owner's acceptance of defective Work under Paragraph 14.04 or Owner's correction of defective Work under Paragraph 14.07, or (c) agreed to by the parties, subject to the need for Engineer's recommendation if the change in the Work involves the design (as set forth in the Drawings, Specifications, or otherwise) or other engineering or technical matters; and

4. Changes that embody the substance of any final and binding results under: Paragraph 11.03.B, resolving the impact of a Work Change Directive; Paragraph 11.09, concerning Change Proposals; Article 12, Claims; Paragraph 13.02.D, final adjustments resulting from allowances; Paragraph 13.03.D, final adjustments relating to determination of quantities for Unit Price Work; and similar provisions.

~~B. If Owner or Contractor refuses to execute a Change Order that is required to be executed under the terms of Paragraph 11.02.A, it will be deemed to be of full force and effect, as if fully executed~~.

11.03 *Work Change Directives*

A. A Work Change Directive will not change the Contract Price or the Contract Times but is evidence that the parties expect that the modification ordered or documented by a Work Change Directive will be incorporated in a subsequently issued Change Order, following negotiations by the parties as to the Work Change Directive's effect, if any, on the Contract Price and Contract Times; or, if negotiations are unsuccessful, by a determination under the terms of the Contract Documents governing adjustments, expressly including Paragraph 11.07 regarding change of Contract Price.

B. If Owner has issued a Work Change Directive and:

1. Contractor believes that an adjustment in Contract Times or Contract Price is necessary, then Contractor shall submit any Change Proposal seeking such an adjustment no later than 30 days after the completion of the Work set out in the Work Change Directive.

2. Owner believes that an adjustment in Contract Times or Contract Price is necessary, then Owner shall submit any Claim seeking such an adjustment no later than 60 days after issuance of the Work Change Directive.

11.04 *Field Orders*

A. Engineer may authorize minor changes in the Work if the changes do not involve an adjustment in the Contract Price or the Contract Times and are compatible with the design concept of the completed Project as a functioning whole as indicated by the Contract Documents. Such changes will be accomplished by a Field Order and will be binding on Owner and also on Contractor, which shall perform the Work involved promptly.

B. If Contractor believes that a Field Order justifies an adjustment in the Contract Price or Contract Times, then before proceeding with the Work at issue, Contractor shall submit a Change Proposal as provided herein.

11.05 *Owner-Authorized Changes in the Work*

A. Without invalidating the Contract and without notice to any surety, Owner may, at any time or from time to time, order additions, deletions, or revisions in the Work. Changes involving the design (as set forth in the Drawings, Specifications, or otherwise) or other engineering or technical matters will be supported by Engineer's recommendation.

B. Such changes in the Work may be accomplished by a Change Order, if Owner and Contractor have agreed as to the effect, if any, of the changes on Contract Times or Contract Price; or by a Work Change Directive. Upon receipt of any such document, Contractor shall promptly proceed with the Work involved; or, in the case of a deletion in the Work, promptly cease construction activities with respect to such deleted Work. Added or revised Work must be performed under the applicable conditions of the Contract Documents.

C. Nothing in this Paragraph 11.05 obligates Contractor to undertake work that Contractor reasonably concludes cannot be performed in a manner consistent with Contractor's safety obligations under the Contract Documents or Laws and Regulations.

11.06 *Unauthorized Changes in the Work*

A. Contractor shall not be entitled to an increase in the Contract Price or an extension of the Contract Times with respect to any work performed that is not required by the Contract Documents, as amended, modified, or supplemented, except in the case of an emergency as provided in Paragraph 7.15 or in the case of uncovering Work as provided in Paragraph 14.05.C.2.

11.07 *Change of Contract Price*

A. The Contract Price may only be changed by a Change Order. Any Change Proposal for an adjustment in the Contract Price must comply with the provisions of Paragraph 11.09. Any Claim for an adjustment of Contract Price must comply with the provisions of Article 12. <u>No course of conduct or dealings between the parties, no express or implied acceptance of alterations or additions to the Work, and no claim that the OWNER has been unjustly enriched by any alterations or additions to the Work shall be the basis of any claim for an increase in any amount due under the Contract Documents</u>

B. An adjustment in the Contract Price will be determined as follows:

1. Where the Work involved is covered by unit prices contained in the Contract Documents, then by application of such unit prices to the quantities of the items involved (subject to the provisions of Paragraph 13.03);
2. Where the Work involved is not covered by unit prices contained in the Contract Documents, then by a mutually agreed lump sum (which may include an allowance for overhead and profit not necessarily in accordance with Paragraph 11.07.C.2); or
3. Where the Work involved is not covered by unit prices contained in the Contract Documents and the parties do not reach mutual agreement to a lump sum, then on ~~the~~ a "Force Account" basis, ~~of~~ comprised by the Cost of the Work (determined as provided in Paragraph 13.01) plus a Contractor's fee for overhead and profit (determined as provided in Paragraph 11.07.C).

C. *Contractor's Fee*: When applicable, the Contractor's fee for overhead and profit will be determined as follows:

1. A mutually acceptable fixed fee.; or
2. If a fixed fee is not agreed upon, then a fee based on the following percentages of the various portions of the Cost of the Work:
   a. For costs incurred under Paragraphs 13.01.B.1 and 13.01.B.2, the Contractor's fee will be 15 percent;
   b. For costs incurred under Paragraph 13.01.B.3, the Contractor's fee will be 5 percent;
   c. Where one or more tiers of subcontracts are on the basis of Cost of the Work plus a fee and no fixed fee is agreed upon, the intent of Paragraphs 11.07.C.2.a and 11.07.C.2.b is that the Contractor's fee will be based on: (1) a fee of 15 percent of the costs incurred under Paragraphs 13.01.B.1 and 13.01.B.2 by the Subcontractor that actually performs the Work, at whatever tier, and (2) with respect to Contractor itself and to any Subcontractors of a tier higher than that of the Subcontractor that actually performs the Work, a fee of 5 percent of the amount (fee plus underlying costs incurred) attributable to the next lower tier Subcontractor; provided, however, that for any such subcontracted Work the maximum total fee to be paid by Owner will be no greater than 27 percent of the costs incurred by the Subcontractor that actually performs the Work;
   d. No fee will be payable on the basis of costs itemized under Paragraphs 13.01.B.4, 13.01.B.5, and 13.01.C;
   e. The amount of credit to be allowed by Contractor to Owner for any change which results in a net decrease in Cost of the Work will be the amount of the actual net decrease in Cost of the Work and a deduction of an additional amount equal to 5 percent of such actual net decrease in Cost of the Work; and
   f. When both additions and credits are involved in any one change or Change Proposal, the adjustment in Contractor's fee will be computed by determining the sum of the costs in each of the cost categories in Paragraph 13.01.B (specifically, payroll costs, Paragraph 13.01.B.1; incorporated materials and equipment costs, Paragraph 13.01.B.2; Subcontract costs, Paragraph 13.01.B.3; special consultants costs, Paragraph 13.01.B.4; and other costs, Paragraph 13.01.B.5) and applying to

each such cost category sum the appropriate fee from Paragraphs 11.07.C.2.a through 11.07.C.2.e, inclusive.

11.08 *Change of Contract Times*

A. The Contract Times may only be changed by a Change Order. Any Change Proposal for an adjustment in the Contract Times must comply with the provisions of Paragraph 11.09. Any Claim for an adjustment in the Contract Times must comply with the provisions of Article 12. No course of conduct or dealings between the parties, no express or implied acceptance of alterations or additions to the Work, and no claim that the Owner has been unjustly enriched by any alterations or additions to the Work shall be the basis of any claim for a change in any time period provided for in the Contract Documents.

B. Delay, disruption, and interference in the Work, and any related changes in Contract Times, are addressed in and governed by Paragraph 4.05.

C. All time limits stated in the Contract Documents are of the essence of the Agreement. The Contractor acknowledges and understands that failure by the Contractor will cause significant damage to the Owner both in direct damages as well as delay damages, including but not limited to the damages specified in the Agreement as actual damages and as liquidated damages.

11.09 *Change Proposals*

A. *Purpose and Content*: Contractor shall submit a Change Proposal to Engineer to request an adjustment in the Contract Times or Contract Price; contest an initial decision by Engineer concerning the requirements of the Contract Documents or relating to the acceptability of the Work under the Contract Documents; challenge a set-off against payment due; or seek other relief under the Contract. The Change Proposal will specify any proposed change in Contract Times or Contract Price, or other proposed relief, and explain the reason for the proposed change, with citations to any governing or applicable provisions of the Contract Documents. Each Change Proposal will address only one issue, or a set of closely related issues.

B. *Change Proposal Procedures*

1. *Submittal*: Contractor shall submit each Change Proposal to Engineer within 30 days after the start of the event giving rise thereto, or after such initial decision.

2. *Supporting Data*: The Contractor shall submit supporting data, including the proposed change in Contract Price or Contract Time (if any), to the Engineer and Owner within 15 days after the submittal of the Change Proposal.

   a. Change Proposals based on or related to delay, interruption, or interference must comply with the provisions of Paragraphs 4.05.D and 4.05.E.

   b. Change proposals related to a change of Contract Price must include full and detailed accounts of materials incorporated into the Work and labor and equipment used for the subject Work.

   The supporting data must be accompanied by a written statement that the supporting data are accurate and complete, and that any requested time or price adjustment is the entire adjustment to which Contractor believes it is entitled as a result of said event.

3. *Engineer's Initial Review*: Engineer will advise Owner regarding the Change Proposal, and consider any comments or response from Owner regarding the Change Proposal. If in its discretion Engineer concludes that additional supporting data is needed before conducting a full review and making a decision regarding the Change Proposal, then Engineer may request that Contractor submit such additional supporting data by a date specified by Engineer, prior to Engineer beginning its full review of the Change Proposal.

4. *Engineer's Full Review and Action on the Change Proposal*: Upon receipt of Contractor's supporting data (including any additional data requested by Engineer), Engineer will conduct a full review of each Change Proposal and, within 30 days after such receipt of the Contractor's supporting data, either approve the Change Proposal in whole, deny it in whole, or approve it in part and deny it in part. Such actions must be in writing, with a copy provided to Owner and Contractor. If Engineer does not take action on the Change Proposal within 30 days, then either Owner or Contractor may at any time thereafter submit a letter to the other party indicating that as a result of Engineer's inaction the Change Proposal is deemed denied, thereby commencing the time for appeal of the denial under Article 12.

5. *Binding Decision*: Engineer's decision is final and binding upon Owner and Contractor, unless Owner or Contractor appeals the decision by filing a Claim under Article 12.

C. *Resolution of Certain Change Proposals*: If the Change Proposal does not involve the design (as set forth in the Drawings, Specifications, or otherwise), the acceptability of the Work, or other engineering or technical matters, then Engineer will notify the parties in writing that the Engineer is unable to resolve the Change Proposal. For purposes of further resolution of such a Change Proposal, such notice will be deemed a denial, and Contractor may choose to seek resolution under the terms of Article 12.

D. *Post-Completion*: Contractor shall not submit any Change Proposals after Engineer issues a written recommendation of final payment pursuant to Paragraph 15.06.B.

11.10 *Notification to Surety*

A. If the provisions of any bond require notice to be given to a surety of any change affecting the general scope of the Work or the provisions of the Contract Documents (including, but not limited to, Contract Price or Contract Times), the giving of any such notice will be Contractor's responsibility. The amount of each applicable bond will be adjusted to reflect the effect of any such change.

ARTICLE 12—CLAIMS

12.01 *Claims*

A. *Claims Process*: The following disputes between Owner and Contractor are subject to the Claims process set forth in this article:

1. Appeals by Owner or Contractor of Engineer's decisions regarding Change Proposals;

2. Owner demands for adjustments in the Contract Price or Contract Times, or other relief under the Contract Documents;

3. Disputes that Engineer has been unable to address because they do not involve the design (as set forth in the Drawings, Specifications, or otherwise), the acceptability of the Work, or other engineering or technical matters; and

4. Subject to the waiver provisions of Paragraph 15.07, any dispute arising after Engineer has issued a written recommendation of final payment pursuant to Paragraph 15.06.B.

B. *Submittal of Claim*: The party submitting a Claim shall deliver it directly to the other party to the Contract promptly (but in no event later than 30 days) after the start of the event giving rise thereto; in the case of appeals regarding Change Proposals within 30 days of the decision under appeal. The party submitting the Claim shall also furnish a copy to the Engineer, for its information only. The responsibility to substantiate a Claim rests with the party making the Claim. In the case of a Claim by Contractor seeking an increase in the Contract Times or Contract Price, Contractor shall certify that the Claim is made in good faith, that the supporting data are accurate and complete, and that to the best of Contractor's knowledge and belief the amount of time or money requested accurately reflects the full amount to which Contractor is entitled.

C. *Review and Resolution*: The party receiving a Claim shall review it thoroughly, giving full consideration to its merits. The two parties shall seek to resolve the Claim through the exchange of information and direct negotiations. The parties may extend the time for resolving the Claim by mutual agreement. All actions taken on a Claim will be stated in writing and submitted to the other party, with a copy to Engineer.

D. *Mediation*

1. At any time after initiation of a Claim, Owner and Contractor may mutually agree to mediation of the underlying dispute. The agreement to mediate will stay the Claim submittal and response process.

2. If Owner and Contractor agree to mediation, then after 60 days from such agreement, either Owner or Contractor may unilaterally terminate the mediation process, and the Claim submittal and decision process will resume as of the date of the termination. If the mediation proceeds but is unsuccessful in resolving the dispute, the Claim submittal and decision process will resume as of the date of the conclusion of the mediation, as determined by the mediator.

3. Owner and Contractor shall each pay one-half of the mediator's fees and costs.

E. *Partial Approval*: If the party receiving a Claim approves the Claim in part and denies it in part, such action will be final and binding ~~unless within 30 days of such action the other party invokes the procedure set forth in Article 17 for final resolution of disputes~~.

F. *Denial of Claim*: If efforts to resolve a Claim are not successful, the party receiving the Claim may deny it by giving written notice of denial to the other party. If the receiving party does not take action on the Claim within 90 days, then either Owner or Contractor may at any time thereafter submit a letter to the other party indicating that as a result of the inaction, the Claim is deemed denied, thereby commencing the time for appeal of the denial. ~~A denial of the Claim will be final and binding unless within 30 days of the denial the other party invokes the procedure set forth in Article 17 for the final resolution of disputes.~~

G. *Final and Binding Results*: If the parties reach a mutual agreement regarding a Claim, whether through approval of the Claim, direct negotiations, mediation, or otherwise; or if a Claim is

approved in part and denied in part, or denied in full, and such actions become final and binding; then the results of the agreement or action on the Claim will be incorporated in a Change Order or other written document to the extent they affect the Contract, including the Work, the Contract Times, or the Contract Price.

ARTICLE 13—COST OF THE WORK; ALLOWANCES; UNIT PRICE WORK

13.01 *Cost of the Work*

A. *Purposes for Determination of Cost of the Work*: The term Cost of the Work means the sum of all costs necessary for the proper performance of the Work at issue, as further defined below. The provisions of this Paragraph 13.01 are used for two distinct purposes:

1. To determine Cost of the Work when Cost of the Work is a component of the Contract Price, under cost-plus-fee, time-and-materials, or other cost-based terms; or

2. When needed to determine the value of a Change Order, Change Proposal, Claim, set-off, or other adjustment in Contract Price. When the value of any such adjustment is determined on the basis of Cost of the Work, Contractor is entitled only to those additional or incremental costs required because of the change in the Work or because of the event giving rise to the adjustment.

B. *Costs Included*: Except as otherwise may be agreed to in writing by Owner, costs included in the Cost of the Work will be in amounts no higher than those commonly incurred in the locality of the Project, will not include any of the costs itemized in Paragraph 13.01.C, and will include only the following items:

1. ~~Payroll costs for employees in the direct employ of Contractor in the performance of the Work under schedules of job classifications agreed upon by Owner and Contractor in advance of the subject Work. Such employees include, without limitation, superintendents, foremen, safety managers, safety representatives, and other personnel employed full time on the Work. Payroll costs for employees not employed full time on the Work will be apportioned on the basis of their time spent on the Work. Payroll costs include, but are not limited to, salaries and wages plus the cost of fringe benefits, which include social security contributions, unemployment, excise, and payroll taxes, workers' compensation, health and retirement benefits, sick leave, and vacation and holiday pay applicable thereto. The expenses of performing Work outside of regular working hours, on Saturday, Sunday, or legal holidays, will be included in the above to the extent authorized by Owner.~~

   For labor and working foremen in direct charge of operations, the Contractor shall receive the wage rates agreed on in writing before beginning work for each hour that said labor and foremen are engaged in such work. Jobsite and home office supervisory personnel shall not be included as direct labor. The Contractor shall receive the actual costs paid to, or in behalf of, workers for subsistence and travel allowances, health and welfare benefits, pension fund benefits or other benefits when such amounts are required by collective bargaining agreement or other employment contract applicable to the classes of labor employed on the Work, but limited to a maximum daily rate for subsistence and travel allowances. This maximum shall be agreed upon prior to the Contractor incurring such charges.

2. ~~Cost of all materials and equipment furnished and incorporated in the Work, including costs of transportation and storage thereof, and Suppliers' field services required in connection therewith. All cash discounts accrue to Contractor unless Owner deposits funds with Contractor with which to make payments, in which case the cash discounts will accrue to Owner. All trade discounts, rebates, and refunds and returns from sale of surplus materials and equipment will accrue to Owner, and Contractor shall make provisions so that they may be obtained~~.

   For materials accepted by the Engineer and used, the Contractor shall receive the actual cost of such materials delivered to the Work, including transportation charges and sales taxes if applicable.

3. ~~Payments made by Contractor to Subcontractors for Work performed by Subcontractors. If required by Owner, Contractor shall obtain competitive bids from subcontractors acceptable to Owner and Contractor and shall deliver such bids to Owner, which will then determine, with the advice of Engineer, which bids, if any, will be acceptable. If any subcontract provides that the Subcontractor is to be paid on the basis of Cost of the Work plus a fee, the Subcontractor's Cost of the Work and fee will be determined in the same manner as Contractor's Cost of the Work and fee as provided in this Paragraph 13.01~~.

   For Change Order work performed by an approved Subcontractor, the Subcontractor shall receive the Subcontractor's actual and reasonable allowable direct cost of such Work plus a 15 percent mark-up for the Subcontractor's indirect jobsite and home office overhead expenses and profit. In addition, the Contractor will be paid a 10 percent mark-up on the Subcontractor's total direct and indirect costs, and profit for general supervision and sequencing of the Change Order work.

4. Costs of special consultants (including but not limited to engineers, architects, testing laboratories, surveyors, attorneys, and accountants) employed or retained for services specifically related to the Work, but only to the extent approved in writing by Owner.

5. Other costs consisting of the following:

   a. The proportion of necessary transportation, travel, and subsistence expenses of Contractor's employees incurred in discharge of duties connected with the Work.

   b. Cost, including transportation and maintenance, of all materials, supplies, equipment, machinery, appliances, office, and temporary facilities at the Site, which are consumed in the performance of the Work, and cost, less market value, of such items used but not consumed which remain the property of Contractor.

      1) In establishing included costs for materials such as scaffolding, plating, or sheeting, consideration will be given to the actual or the estimated life of the material for use on other projects; or rental rates may be established on the basis of purchase or salvage value of such items, whichever is less. Contractor will not be eligible for compensation for such items in an amount that exceeds the purchase cost of such item.

   c. *Construction Equipment Rental*

      ~~1) Rentals of all construction equipment and machinery, and the parts thereof, in accordance with rental agreements approved by Owner as to price (including any surcharge or special rates applicable to overtime use of the construction~~

~~equipment or machinery), and the costs of transportation, loading, unloading, assembly, dismantling, and removal thereof. All such costs will be in accordance with the terms of said rental agreements. The rental of any such equipment, machinery, or parts must cease when the use thereof is no longer necessary for the Work.~~

~~2) Costs for equipment and machinery owned by Contractor or a Contractor-related entity will be paid at a rate shown for such equipment in the equipment rental rate book specified in the Supplementary Conditions. An hourly rate will be computed by dividing the monthly rates by 176. These computed rates will include all operating costs.~~

~~3) With respect to Work that is the result of a Change Order, Change Proposal, Claim, set-off, or other adjustment in Contract Price ("changed Work"), included costs will be based on the time the equipment or machinery is in use on the changed Work and the costs of transportation, loading, unloading, assembly, dismantling, and removal when directly attributable to the changed Work. The cost of any such equipment or machinery, or parts thereof, must cease to accrue when the use thereof is no longer necessary for the changed Work.~~

For authorized machinery or special equipment, the Contractor shall receive the rental rates agreed on in writing before such work is begun. For equipment rented from independent outside sources, the Contractor will be reimbursed the reasonable actual cost as shown on paid rental invoices. For company owned equipment, the Contractor will be reimbursed his internal cost recovery equipment charge rate consistent with his original bid cost estimates. If the Contractor chooses to use a rental rate guide book instead of his internal cost recovery rates to establish rental rates for company owned equipment, costs for equipment and will be paid at a rate shown for such equipment in the equipment rental rate book specified in the Supplementary Conditions. In addition, no 15 percent mark-up on equipment direct cost for jobsite and home office overhead expenses and profit will be allowed if the Contractor chooses to use rental rate guide book prices instead of his internal cost recovery rates.

d. Sales, consumer, use, and other similar taxes related to the Work, and for which Contractor is liable, as imposed by Laws and Regulations.

e. Deposits lost for causes other than negligence of Contractor, any Subcontractor, or anyone directly or indirectly employed by any of them or for whose acts any of them may be liable, and royalty payments and fees for permits and licenses.

f. Losses and damages (and related expenses) caused by damage to the Work, not compensated by insurance or otherwise, sustained by Contractor in connection with the performance of the Work ~~(except losses and damages within the deductible amounts of builder's risk or other property insurance established in accordance with Paragraph 6.04)~~, provided such losses and damages have resulted from causes other than the negligence of Contractor, any Subcontractor, or anyone directly or indirectly employed by any of them or for whose acts any of them may be liable. Such losses include settlements made with the written consent and approval of Owner. No such losses, damages, and expenses will be included in the Cost of the Work for the purpose of determining Contractor's fee.

g. The cost of utilities, fuel, and sanitary facilities at the Site.

h. Minor expenses such as communication service at the Site, express and courier services, and similar petty cash items in connection with the Work.

i. ~~The costs of premiums for all bonds and insurance that Contractor is required by the Contract Documents to purchase and maintain.~~

For property damage, liability and workmen's compensation insurance premiums, unemployment insurance contributions, social security taxes, and bond costs on Force Account work, the Contractor shall receive the actual cost thereof. The Contractor shall furnish satisfactory evidence of the rates paid for such bond, insurance and tax.

C. *Costs Excluded*: The term Cost of the Work does not include any of the following items:

1. Payroll costs and other compensation of Contractor's officers, executives, principals, general managers, engineers, architects, estimators, attorneys, auditors, accountants, purchasing and contracting agents, expediters, timekeepers, clerks, and other personnel employed by Contractor, whether at the Site or in Contractor's principal or branch office for general administration of the Work and not specifically included in the agreed upon schedule of job classifications referred to in Paragraph 13.01.B.1 or specifically covered by Paragraph 13.01.B.4. The payroll costs and other compensation excluded here are to be considered administrative costs covered by the Contractor's fee.

2. The cost of purchasing, renting, or furnishing small tools and hand tools.

3. Expenses of Contractor's principal and branch offices other than Contractor's office at the Site.

4. Any part of Contractor's capital expenses, including interest on Contractor's capital employed for the Work and charges against Contractor for delinquent payments.

5. Costs due to the negligence of Contractor, any Subcontractor, or anyone directly or indirectly employed by any of them or for whose acts any of them may be liable, including but not limited to, the correction of defective Work, disposal of materials or equipment wrongly supplied, and making good any damage to property.

6. Expenses incurred in preparing and advancing Claims.

7. Other overhead or general expense costs of any kind and the costs of any item not specifically and expressly included in Paragraph 13.01.B.

D. *Contractor's Fee*

~~1. When the Work as a whole is performed on the basis of cost-plus-a-fee, then:~~

~~a. Contractor's fee for the Work set forth in the Contract Documents as of the Effective Date of the Contract will be determined as set forth in the Agreement.~~

~~b. for any Work covered by a Change Order, Change Proposal, Claim, set-off, or other adjustment in Contract Price on the basis of Cost of the Work, Contractor's fee will be determined as follows:~~

~~1) When the fee for the Work as a whole is a percentage of the Cost of the Work, the fee will automatically adjust as the Cost of the Work changes.~~

~~2) When the fee for the Work as a whole is a fixed fee, the fee for any additions or deletions will be determined in accordance with Paragraph 11.07.C.2~~.

~~2~~ 1. When the Work as a whole is performed on the basis of a stipulated sum, or any other basis other than cost-plus-a-fee, then Contractor's fee for any Work covered by a Change Order, Change Proposal, Claim, set-off, or other adjustment in Contract Price on the basis of Cost of the Work will be determined in accordance with Paragraph 11.07.C.2.

E. *Documentation and Audit*: Whenever the Cost of the Work for any purpose is to be determined pursuant to this Article 13, Contractor and pertinent Subcontractors will establish and maintain records of the costs in accordance with generally accepted accounting practices. Subject to prior written notice, Owner will be afforded reasonable access, during normal business hours, to all Contractor's accounts, records, books, correspondence, instructions, drawings, receipts, vouchers, memoranda, and similar data relating to the Cost of the Work and Contractor's fee. Contractor shall preserve all such documents for a period of three years after the final payment by Owner. Pertinent Subcontractors will afford such access to Owner, and preserve such documents, to the same extent required of Contractor.

13.02 *Allowances*

A. It is understood that Contractor has included in the Contract Price all allowances so named in the Contract Documents and shall cause the Work so covered to be performed for such sums and by such persons or entities as may be acceptable to Owner and Engineer.

B. *Cash Allowances*: Contractor agrees that:

1. the cash allowances include the cost to Contractor (less any applicable trade discounts) of materials and equipment required by the allowances to be delivered at the Site, and all applicable taxes; and

2. Contractor's costs for unloading and handling on the Site, labor, installation, overhead, profit, and other expenses contemplated for the cash allowances have been included in the Contract Price and not in the allowances, and no demand for additional payment for any of the foregoing will be valid.

C. *Owner's Contingency Allowance*: Contractor agrees that an Owner's contingency allowance, if any, is for the sole use of Owner to cover unanticipated costs.

D. Prior to final payment, an appropriate Change Order will be issued as recommended by Engineer to reflect actual amounts due Contractor for Work covered by allowances, and the Contract Price will be correspondingly adjusted.

13.03 *Unit Price Work*

A. Where the Contract Documents provide that all or part of the Work is to be Unit Price Work, initially the Contract Price will be deemed to include for all Unit Price Work an amount equal to the sum of the unit price for each separately identified item of Unit Price Work times the estimated quantity of each item as indicated in the Agreement.

B. The estimated quantities of items of Unit Price Work are not guaranteed and are solely for the purpose of comparison of Bids and determining an initial Contract Price. Payments to Contractor for Unit Price Work will be based on actual quantities.

C. Each unit price will be deemed to include an amount considered by Contractor to be adequate to cover Contractor's overhead and profit for each separately identified item.

D. Engineer will determine the actual quantities and classifications of Unit Price Work performed by Contractor. Engineer will review with Contractor the Engineer's preliminary determinations on such matters before rendering a written decision thereon (by recommendation of an Application for Payment or otherwise). Engineer's written decision thereon will be final and binding (except as modified by Engineer to reflect changed factual conditions or more accurate data) upon Owner and Contractor, and the final adjustment of Contract Price will be set forth in a Change Order, subject to the provisions of the following paragraph.

E. *Adjustments in Unit Price*

~~1. Contractor or Owner shall be entitled to an adjustment in the unit price with respect to an item of Unit Price Work if:~~

~~a. the quantity of the item of Unit Price Work performed by Contractor differs materially and significantly from the estimated quantity of such item indicated in the Agreement; and~~

~~b. Contractor's unit costs to perform the item of Unit Price Work have changed materially and significantly as a result of the quantity change.~~

~~2. The adjustment in unit price will account for and be coordinated with any related changes in quantities of other items of Work, and in Contractor's costs to perform such other Work, such that the resulting overall change in Contract Price is equitable to Owner and Contractor.~~

~~3. Adjusted unit prices will apply to all units of that item~~.

1. Pursuant to La. R.S. 38:2212, where certain unit prices are contained in the initial Contract, no deviations shall be allowed in computing negotiated Change Order costs, thus adjustments in unit price are not permitted. To the extent the statute is found to be non-applicable, then the provisions set forth in paragraph 13.03(E)(2) will apply when the stated conditions exist.

2. The unit price of an item of Unit Price Work shall be subject to reevaluation and adjustment under the following conditions:

a. if the total cost of a particular item of Unit Price Work amounts to ten (10) percent or more of the Contract Price and the variation in the quantity twenty-five (25) percent from the estimated quantity of such item indicated in the Agreement; and

b. if there is no corresponding adjustment with respect to any other item of Work; and

c. if Contractor believes that Contractor has incurred additional expense as a result thereof; or if Owner believes that the quantity variation entitles Owner to an adjustment in the unit price, either Owner or Contractor may make a claim for an adjustment in the Contract Price in accordance with Article 12 if the parties are unable to agree as to the effect of any such variations in the quantity of Unit Price Work performed.

ARTICLE 14—TESTS AND INSPECTIONS; CORRECTION, REMOVAL, OR ACCEPTANCE OF DEFECTIVE WORK

14.01 *Access to Work*

A. Owner, Engineer, their consultants and other representatives and personnel of Owner, independent testing laboratories, and authorities having jurisdiction have access to the Site and the Work at reasonable times for their observation, inspection, and testing. Contractor shall provide them proper and safe conditions for such access and advise them of Contractor's safety procedures and programs so that they may comply with such procedures and programs as applicable.

14.02 *Tests, Inspections, and Approvals*

A. Contractor shall give Engineer timely notice of readiness of the Work (or specific parts thereof) for all required inspections and tests, and shall cooperate with inspection and testing personnel to facilitate required inspections and tests.

B. Owner shall retain and pay for the services of an independent inspector, testing laboratory, or other qualified individual or entity to perform all inspections and tests expressly required by the Contract Documents to be furnished and paid for by Owner, except that costs incurred in connection with tests or inspections of covered Work will be governed by the provisions of Paragraph 14.05.

C. If Laws or Regulations of any public body having jurisdiction require any Work (or part thereof) specifically to be inspected, tested, or approved by an employee or other representative of such public body, Contractor shall assume full responsibility for arranging and obtaining such inspections, tests, or approvals, pay all costs in connection therewith, and furnish Engineer the required certificates of inspection or approval.

D. Contractor shall be responsible for arranging, obtaining, and paying for all inspections and tests required:

1. by the Contract Documents, unless the Contract Documents expressly allocate responsibility for a specific inspection or test to Owner;

2. to attain Owner's and Engineer's acceptance of materials or equipment to be incorporated in the Work;

3. by manufacturers of equipment furnished under the Contract Documents;

4. for testing, adjusting, and balancing of mechanical, electrical, and other equipment to be incorporated into the Work; and

5. for acceptance of materials, mix designs, or equipment submitted for approval prior to Contractor's purchase thereof for incorporation in the Work.

Such inspections and tests will be performed by independent inspectors, testing laboratories, or other qualified individuals or entities acceptable to Owner ~~and Engineer.~~

E. If the Contract Documents require the Work (or part thereof) to be approved by Owner, Engineer, or another designated individual or entity, then Contractor shall assume full responsibility for arranging and obtaining such approvals.

F. If any Work (or the work of others) that is to be inspected, tested, or approved is covered by Contractor without written concurrence of Engineer, Contractor shall, if requested by

Engineer, uncover such Work for observation. Such uncovering will be at Contractor's expense unless Contractor had given Engineer timely notice of Contractor's intention to cover the same and Engineer had not acted with reasonable promptness in response to such notice.

14.03 *Defective Work*

A. *Contractor's Obligation*: It is Contractor's obligation to assure that the Work is not defective.

B. *Engineer's Authority*: Engineer has the authority to determine whether Work is defective, and to reject defective Work.

C. *Notice of Defects*: Prompt written notice of all defective Work of which Owner or Engineer has actual knowledge will be given to Contractor.

D. *Correction, or Removal and Replacement*: Promptly after receipt of written notice of defective Work, Contractor shall correct all such defective Work, whether or not fabricated, installed, or completed, or, if Engineer has rejected the defective Work, remove it from the Project and replace it with Work that is not defective.

E. *Preservation of Warranties*: When correcting defective Work, Contractor shall take no action that would void or otherwise impair Owner's special warranty and guarantee, if any, on said Work.

F. *Costs and Damages*: In addition to its correction, removal, and replacement obligations with respect to defective Work, Contractor shall pay all claims, costs, losses, and damages arising out of or relating to defective Work, including but not limited to the cost of the inspection, testing, correction, removal, replacement, or reconstruction of such defective Work, fines levied against Owner by governmental authorities because the Work is defective, and the costs of repair or replacement of work of others resulting from defective Work. Prior to final payment, if Owner and Contractor are unable to agree as to the measure of such claims, costs, losses, and damages resulting from defective Work, then Owner may impose a reasonable set-off against payments due under Article 15.

14.04 *Acceptance of Defective Work*

A. If, instead of requiring correction or removal and replacement of defective Work, Owner prefers to accept it, Owner may do so (subject, if such acceptance occurs prior to final payment, to Engineer's confirmation that such acceptance is in general accord with the design intent and applicable engineering principles, and will not endanger public safety). Contractor shall pay all claims, costs, losses, and damages attributable to Owner's evaluation of and determination to accept such defective Work (such costs to be approved by Engineer as to reasonableness), and for the diminished value of the Work to the extent not otherwise paid by Contractor. If any such acceptance occurs prior to final payment, the necessary revisions in the Contract Documents with respect to the Work will be incorporated in a Change Order. If the parties are unable to agree as to the decrease in the Contract Price, reflecting the diminished value of Work so accepted, then Owner may impose a reasonable set-off against payments due under Article 15. If the acceptance of defective Work occurs after final payment, Contractor shall pay an appropriate amount to Owner.

14.05 *Uncovering Work*

A. Engineer has the authority to require additional inspection or testing of the Work, whether or not the Work is fabricated, installed, or completed.

B. If any Work is covered contrary to the written request of Engineer, then Contractor shall, if requested by Engineer, uncover such Work for Engineer's observation, and then replace the covering, all at Contractor's expense.

C. If Engineer considers it necessary or advisable that covered Work be observed by Engineer or inspected or tested by others, then Contractor, at Engineer's request, shall uncover, expose, or otherwise make available for observation, inspection, or testing as Engineer may require, that portion of the Work in question, and provide all necessary labor, material, and equipment.

1. If it is found that the uncovered Work is defective, Contractor shall be responsible for all claims, costs, losses, and damages arising out of or relating to such uncovering, exposure, observation, inspection, and testing, and of satisfactory replacement or reconstruction (including but not limited to all costs of repair or replacement of work of others); and pending Contractor's full discharge of this responsibility the Owner shall be entitled to impose a reasonable set-off against payments due under Article 15.

2. If the uncovered Work is not found to be defective, Contractor shall be allowed an increase in the Contract Price or an extension of the Contract Times, directly attributable to such uncovering, exposure, observation, inspection, testing, replacement, and reconstruction unless Contractor fails to provide written notice as required by paragraph 14.02F. If the parties are unable to agree as to the amount or extent thereof, then Contractor may submit a Change Proposal within 30 days of the determination that the Work is not defective.

14.06 *Owner May Stop the Work*

A. If the Work is defective, or Contractor fails to supply sufficient skilled workers or suitable materials or equipment, or fails to perform the Work in such a way that the completed Work will conform to the Contract Documents, then Owner may order Contractor to stop the Work, or any portion thereof, until the cause for such order has been eliminated; however, this right of Owner to stop the Work will not give rise to any duty on the part of Owner to exercise this right for the benefit of Contractor, any Subcontractor, any Supplier, any other individual or entity, or any surety for, or employee or agent of any of them.

14.07 *Owner May Correct Defective Work*

A. If Contractor fails within a reasonable time after written notice from Engineer to correct defective Work, or to remove and replace defective Work as required by Engineer, then Owner may, after 7 days' written notice to Contractor, correct or remedy any such deficiency.

B. In exercising the rights and remedies under this Paragraph 14.07, Owner shall proceed expeditiously. In connection with such corrective or remedial action, Owner may exclude Contractor from all or part of the Site, take possession of all or part of the Work and suspend Contractor's services related thereto, and incorporate in the Work all materials and equipment stored at the Site or for which Owner has paid Contractor but which are stored elsewhere. Contractor shall allow Owner, Owner's representatives, agents and employees, Owner's other contractors, and Engineer and Engineer's consultants access to the Site to enable Owner to exercise the rights and remedies under this paragraph.

C. All claims, costs, losses, and damages (including but not limited to all fees and charges of engineers, architects, attorneys, and other professionals) incurred or sustained by Owner in exercising the rights and remedies under this Paragraph 14.07 will be charged against

Contractor as set-offs against payments due under Article 15. Such claims, costs, losses and damages will include but not be limited to all costs of repair, or replacement of work of others destroyed or damaged by correction, removal, or replacement of Contractor's defective Work.

D. Contractor shall not be allowed an extension of the Contract Times because of any delay in the performance of the Work attributable to the exercise by Owner of Owner's rights and remedies under this Paragraph 14.07.

ARTICLE 15—PAYMENTS TO CONTRACTOR; SET-OFFS; COMPLETION; CORRECTION PERIOD

15.01 *Progress Payments*

A. *Basis for Progress Payments*: The Schedule of Values established as provided in Article 2 will serve as the basis for progress payments and will be incorporated into a form of Application for Payment acceptable to Engineer. Progress payments for Unit Price Work will be based on the number of units completed during the pay period, as determined under the provisions of Paragraph 13.03. Progress payments for cost-based Work will be based on Cost of the Work completed by Contractor during the pay period.

B. *Applications for Payments*

1. At least 20 days before the date established in the Agreement for each progress payment (but not more often than once a month), Contractor shall submit to Engineer for review an Application for Payment filled out and signed by Contractor covering the Work completed as of the date of the Application and accompanied by such supporting documentation as is required by the Contract Documents.

2. If payment is requested on the basis of materials and equipment not incorporated in the Work but delivered and suitably stored at the Site or at another location agreed to in writing, the Application for Payment must also be accompanied by: (a) a bill of sale, invoice, copies of subcontract or purchase order payments, or other documentation establishing full payment by Contractor for the materials and equipment; (b) at Owner's request, documentation warranting that Owner has received the materials and equipment free and clear of all Liens; and (c) evidence that the materials and equipment are covered by appropriate property insurance, a warehouse bond, or other arrangements to protect Owner's interest therein, all of which must be satisfactory to Owner.

3. Beginning with the second Application for Payment, each Application must include an affidavit of Contractor stating that all previous progress payments received by Contractor have been applied to discharge Contractor's legitimate obligations associated with prior Applications for Payment.

4. The amount of retainage with respect to progress payments will be as stipulated in the Agreement.

5. Contractor shall also comply with the following specific requirements:

   a. The aggregate cost of materials stored offsite shall not at any time, without written approval of Owner, exceed the amount identified in the Supplementary Conditions.

b. Title to such materials shall be vested in Owner, as evidenced by documentation satisfactory in form and substance to Owner, including, without limitation, recorded financing statements, UCC filings, and UCC searches.

c. With each application for payment, the Contractor shall submit to Owner a written list identifying each location where materials are stored off the Project Site and the value of materials at each location. Contractor shall procure insurance satisfactory to Owner for materials stored off the Project Site in an amount not less than the total value thereof.

d. The consent of any Surety shall be obtained to the extent required prior to payment for any materials stored off the Project Site.

e. Representatives of Owner shall have the right to make inspections of the storage areas at any time.

f. Such materials shall be (1) protected from diversion, destruction, theft and damage to the satisfaction of Owner; (2) specifically marked for use on the Project; and (3) segregated from other materials at the storage facility.

C. *Review of Applications*

1. Engineer will, within 10 days after receipt of each Application for Payment, including each resubmittal, either indicate in writing a recommendation of payment and present the Application to Owner, or return the Application to Contractor indicating in writing Engineer's reasons for refusing to recommend payment. In the latter case, Contractor may make the necessary corrections and resubmit the Application.

2. Engineer's recommendation of any payment requested in an Application for Payment will constitute a representation by Engineer to Owner, based on Engineer's observations of the executed Work as an experienced and qualified design professional, and on Engineer's review of the Application for Payment and the accompanying data and schedules, that to the best of Engineer's knowledge, information and belief:

   a. the Work has progressed to the point indicated;

   b. the quality of the Work is generally in accordance with the Contract Documents (subject to an evaluation of the Work as a functioning whole prior to or upon Substantial Completion, the results of any subsequent tests called for in the Contract Documents, a final determination of quantities and classifications for Unit Price Work under Paragraph 13.03, and any other qualifications stated in the recommendation); and

   c. the conditions precedent to Contractor's being entitled to such payment appear to have been fulfilled in so far as it is Engineer's responsibility to observe the Work.

3. By recommending any such payment Engineer will not thereby be deemed to have represented that:

   a. inspections made to check the quality or the quantity of the Work as it has been performed have been exhaustive, extended to every aspect of the Work in progress, or involved detailed inspections of the Work beyond the responsibilities specifically assigned to Engineer in the Contract; or

b. there may not be other matters or issues between the parties that might entitle Contractor to be paid additionally by Owner or entitle Owner to withhold payment to Contractor.

4. Neither Engineer's review of Contractor's Work for the purposes of recommending payments nor Engineer's recommendation of any payment, including final payment, will impose responsibility on Engineer:

   a. to supervise, direct, or control the Work;

   b. for the means, methods, techniques, sequences, or procedures of construction, or the safety precautions and programs incident thereto;

   c. for Contractor's failure to comply with Laws and Regulations applicable to Contractor's performance of the Work;

   d. to make any examination to ascertain how or for what purposes Contractor has used the money paid by Owner; or

   e. to determine that title to any of the Work, materials, or equipment has passed to Owner free and clear of any Liens.

5. Engineer may refuse to recommend the whole or any part of any payment if, in Engineer's opinion, it would be incorrect to make the representations to Owner stated in Paragraph 15.01.C.2.

6. Engineer will recommend reductions in payment (set-offs) necessary in Engineer's opinion to protect Owner from loss because:

   a. the Work is defective, requiring correction or replacement;

   b. the Contract Price has been reduced by Change Orders;

   c. Owner has been required to correct defective Work in accordance with Paragraph 14.07, or has accepted defective Work pursuant to Paragraph 14.04;

   d. Owner has been required to remove or remediate a Hazardous Environmental Condition for which Contractor is responsible;

   e. Engineer has actual knowledge of the occurrence of any of the events that would constitute a default by Contractor and therefore justify termination for cause under the Contract Documents;

   f. Engineer has knowledge that Contractor has failed to pay Subcontractors or Suppliers or for labor;

   g. Contractor has failed to make submittals in accordance with the accepted schedules or otherwise failed to comply with paragraph 2.07; or

   h. Contractor owes or may owe Owner liquidated damages, actual damages, or both, in accordance with the provisions in the Agreement regarding delay in completion of the Work within the Contract Times.

D. *Payment Becomes Due*

1. ~~Ten~~ Thirty (30) days after presentation of the Application for Payment to Owner with Engineer's recommendation, the amount recommended (subject to any Owner set-offs) will become due, and when due will be paid by Owner to Contractor.

E. *Reductions in Payment by Owner*

1. In addition to any reductions in payment (set-offs) recommended by Engineer, Owner is entitled to impose a set-off against payment based on any of the following:

   a. Claims have been made against Owner based on Contractor's conduct in the performance or furnishing of the Work, or Owner has incurred costs, losses, or damages resulting from Contractor's conduct in the performance or furnishing of the Work, including but not limited to claims, costs, losses, or damages from workplace injuries, adjacent property damage, non-compliance with Laws and Regulations, and patent infringement;

   b. Contractor has failed to take reasonable and customary measures to avoid damage, delay, disruption, and interference with other work at or adjacent to the Site;

   c. Contractor has failed to provide and maintain required bonds or insurance;

   d. Owner has been required to remove or remediate a Hazardous Environmental Condition for which Contractor is responsible;

   e. Owner has incurred extra charges or engineering costs related to submittal reviews, evaluations of proposed substitutes, tests and inspections, or return visits to manufacturing or assembly facilities;

   f. The Work is defective, requiring correction or replacement;

   g. Owner has been required to correct defective Work in accordance with Paragraph 14.07, or has accepted defective Work pursuant to Paragraph 14.04;

   h. The Contract Price has been reduced by Change Orders;

   i. An event has occurred that would constitute a default by Contractor and therefore justify a termination for cause;

   j. Liquidated or other damages have accrued as a result of Contractor's failure to achieve Milestones, Substantial Completion, or final completion of the Work;

   k. Liens have been filed in connection with the Work, except where Contractor has delivered a specific bond satisfactory to Owner to secure the satisfaction and discharge of such Liens;

   l. Other items entitle Owner to a set-off against the amount recommended;

   m. Owner has actual knowledge of the occurrence of any of the events enumerated in paragraphs 15.01.C.6.f through 15.01.C.6.h or 16.02.A; or

   n. Punch lists generated during a construction project shall include the cost estimates for the particular items of work the design professional has developed based on the mobilization, labor, materials and equipment costs of correcting each punch list item. The Owner shall withhold from payment the value of the punch list as per La. R.S. 38:2248 B.

2. If Owner imposes any set-off against payment, whether based on its own knowledge or on the written recommendations of Engineer, Owner will give Contractor immediate written notice (with a copy to Engineer) stating the reasons for such action and the specific amount of the reduction, and promptly pay Contractor any amount remaining

after deduction of the amount so withheld. Owner shall promptly pay Contractor the amount so withheld, or any adjustment thereto agreed to by Owner and Contractor, if Contractor remedies the reasons for such action. The reduction imposed will be binding on Contractor unless it duly submits a Change Proposal contesting the reduction.

3. Upon a subsequent determination that Owner's refusal of payment was not justified, the amount wrongfully withheld will be treated as an amount due as determined by Paragraph 15.01.D.1 and subject to interest as provided in the Agreement.

15.02 *Contractor's Warranty of Title*

A. Contractor warrants and guarantees that title to all Work, materials, and equipment furnished under the Contract will pass to Owner free and clear of (1) all Liens and other title defects, and (2) all patent, licensing, copyright, or royalty obligations, no later than 7 days after the time of payment by Owner.

15.03 *Substantial Completion*

A. When Contractor considers the entire Work ready for its intended use Contractor shall notify Owner and Engineer in writing that the entire Work is substantially complete and request that Engineer issue a certificate of Substantial Completion. Contractor shall at the same time submit to Owner and Engineer an initial draft of punch list items to be completed or corrected before final payment.

B. Promptly after Contractor's notification, Owner, Contractor, and Engineer shall make an inspection of the Work to determine the status of completion. If Engineer does not consider the Work substantially complete, Engineer will notify Contractor in writing giving the reasons therefor.

C. If Engineer considers the Work substantially complete, Engineer will deliver to Owner a preliminary certificate of Substantial Completion which will fix the date of Substantial Completion. Engineer shall attach to the certificate a punch list of items to be completed or corrected before final payment, <u>along with cost estimates as required by law</u>. Owner shall have 7 days after receipt of the preliminary certificate during which to make written objection to Engineer as to any provisions of the certificate or attached punch list. If, after considering the objections to the provisions of the preliminary certificate, Engineer concludes that the Work is not substantially complete, Engineer will, within 14 days after submission of the preliminary certificate to Owner, notify Contractor in writing that the Work is not substantially complete, stating the reasons therefor. If Owner does not object to the provisions of the certificate, or if despite consideration of Owner's objections Engineer concludes that the Work is substantially complete, then Engineer will, within said 14 days, execute and deliver to Owner and Contractor a final certificate of Substantial Completion (with a revised punch list of items, <u>including cost estimates</u>, to be completed or corrected) reflecting such changes from the preliminary certificate as Engineer believes justified after consideration of any objections from Owner.

D. At the time of receipt of the preliminary certificate of Substantial Completion, Owner and Contractor will confer regarding Owner's use or occupancy of the Work following Substantial Completion, review the builder's risk insurance policy with respect to the end of the builder's risk coverage, and confirm the transition to coverage of the Work under a permanent property insurance policy held by Owner. Unless Owner and Contractor agree otherwise in writing, Owner shall bear responsibility for security, operation, protection of the Work,

property insurance, maintenance, heat, and utilities upon Owner's use or occupancy of the Work.

E. After Substantial Completion the Contractor shall promptly begin work on the punch list of items to be completed or corrected prior to final payment. In appropriate cases Contractor may submit monthly Applications for Payment for completed punch list items, following the progress payment procedures set forth above.

F. Owner shall have the right to exclude Contractor from the Site after the date of Substantial Completion subject to allowing Contractor reasonable access to remove its property and complete or correct items on the punch list.

G. Upon issuance of the final Certificate of Substantial Completion as set forth in Paragraph 15.03.C, Owner, through its governing authority, shall adopt a resolution accepting the work as substantially complete and directing Contractor to record such acceptance with the Clerk of Court and Ex-Officio Recorder of Mortgages as provided in La R.S. 38:2241.1(C). Contractor may also apply at the appropriate time for payment of retainage following the procedure for progress payments. In accordance with the Public Contract Law, Owner shall withhold from any payment made, an amount equal to the value established by Engineer of the cost of the incomplete items contained on the punch list of items to be completed or corrected that was prepared by Engineer in accordance with Paragraph 15.03.C, and an amount to cover the cost of any known claims of materialmen, laborers, suppliers or subcontractors, and any other amounts which Owner is permitted to deduct by law or pursuant to any provisions of the Contract Documents.

15.04 *Partial Use or Occupancy*

A. Prior to Substantial Completion of all the Work, Owner may use or occupy any substantially completed part of the Work which has specifically been identified in the Contract Documents, or which Owner, Engineer, and Contractor agree constitutes a separately functioning and usable part of the Work that can be used by Owner for its intended purpose without significant interference with Contractor's performance of the remainder of the Work, subject to the following conditions:

1. At any time, Owner may request in writing that Contractor permit Owner to use or occupy any such part of the Work that Owner believes to be substantially complete. If and when Contractor agrees that such part of the Work is substantially complete, Contractor, Owner, and Engineer will follow the procedures of Paragraph 15.03.A through 15.03.E for that part of the Work.

2. At any time, Contractor may notify Owner and Engineer in writing that Contractor considers any such part of the Work substantially complete and request Engineer to issue a certificate of Substantial Completion for that part of the Work.

3. Within a reasonable time after either such request, Owner, Contractor, and Engineer shall make an inspection of that part of the Work to determine its status of completion. If Engineer does not consider that part of the Work to be substantially complete, Engineer will notify Owner and Contractor in writing giving the reasons therefor. If Engineer considers that part of the Work to be substantially complete, the provisions of Paragraph 15.03 will apply with respect to certification of Substantial Completion of that part of the Work and the division of responsibility in respect thereof and access thereto.

4. No use or occupancy or separate operation of part of the Work may occur prior to compliance with the requirements of Paragraph 6.04 regarding builder's risk or other property insurance.

5. Owner may at any time request Contractor in writing to permit Owner to take over operation of any such part of the Work although it is not substantially complete. A copy of such request will be sent to Engineer and within a reasonable time thereafter Owner, Contractor and Engineer shall make an inspection of that part of the Work to determine its status of completion and will prepare a list of the items remaining to be completed or corrected thereon before final payment. If Contractor does not object in writing to Owner and Engineer that such part of the Work is not ready for separate operation by Owner, Engineer will finalize the list of items to be completed or corrected and will deliver such lists to Owner and Contractor together with a written recommendation as to the division of responsibilities pending final payment between Owner and Contractor with respect to security, operation, safety, maintenance, utilities, insurance, warranties and guarantees for that part of the Work which will become binding upon Owner and Contractor at the time when Owner takes over such operation (unless they shall have otherwise agreed in writing and so informed Engineer). During such operation and prior to Substantial Completion of such part of the Work, Owner shall allow Contractor reasonable access to complete or correct items on said list and to complete other related Work.

15.05 *Final Inspection*

A. Upon written notice from Contractor that the entire Work or an agreed portion thereof is complete, Engineer will promptly make a final inspection with Owner and Contractor and will notify Contractor in writing of all particulars in which this inspection reveals that the Work, or agreed portion thereof, is incomplete or defective. Contractor shall immediately take such measures as are necessary to complete such Work or remedy such deficiencies.

15.06 *Final Payment*

A. *Application for Payment*

1. After Contractor has, in the opinion of Engineer, satisfactorily completed all corrections identified during the final inspection and has delivered, in accordance with the Contract Documents, all maintenance and operating instructions, schedules, guarantees, bonds, certificates or other evidence of insurance, certificates of inspection, annotated record documents (as provided in Paragraph 7.12), and other documents, Contractor may make application for final payment.

2. The final Application for Payment must be accompanied (except as previously delivered) by:

   a. all documentation called for in the Contract Documents;

   b. consent of the surety, if any, to final payment;

   c. satisfactory evidence that all title issues have been resolved such that title to all Work, materials, and equipment has passed to Owner free and clear of any Liens or other title defects, or will so pass upon final payment.

   d. a list of all duly pending Change Proposals and Claims; and

e. complete and legally effective releases or waivers (satisfactory to Owner) of all Lien rights arising out of the Work, and of Liens filed in connection with the Work.

~~3. In lieu of the releases or waivers of Liens specified in Paragraph 15.06.A.2 and as approved by Owner, Contractor may furnish receipts or releases in full and an affidavit of Contractor that: (a) the releases and receipts include all labor, services, material, and equipment for which a Lien could be filed; and (b) all payrolls, material and equipment bills, and other indebtedness connected with the Work for which Owner might in any way be responsible, or which might in any way result in liens or other burdens on Owner's property, have been paid or otherwise satisfied. If any Subcontractor or Supplier fails to furnish such a release or receipt in full, Contractor may furnish a bond or other collateral satisfactory to Owner to indemnify Owner against any Lien, or Owner at its option may issue joint checks payable to Contractor and specified Subcontractors and Suppliers.~~

B. *Engineer's Review of Final Application and Recommendation of Payment*: If, on the basis of Engineer's observation of the Work during construction and final inspection, and Engineer's review of the final Application for Payment and accompanying documentation as required by the Contract Documents, Engineer is satisfied that the Work has been completed and Contractor's other obligations under the Contract have been fulfilled, Engineer will, within 10 days after receipt of the final Application for Payment, indicate in writing Engineer's recommendation of final payment and present the final Application for Payment to Owner for payment. Such recommendation will account for any set-offs against payment that are necessary in Engineer's opinion to protect Owner from loss for the reasons stated above with respect to progress payments. Otherwise, Engineer will return the Application for Payment to Contractor, indicating in writing the reasons for refusing to recommend final payment, in which case Contractor shall make the necessary corrections and resubmit the Application for Payment.

C. *Notice of Acceptability*: In support of its recommendation of payment of the final Application for Payment, Engineer will also give written notice to Owner and Contractor that the Work is acceptable, subject to stated limitations in the notice and to the provisions of Paragraph 15.07.

D. *Completion of Work*: The Work is complete (subject to surviving obligations) when it is ready for final payment as established by the Engineer's written recommendation of final payment and issuance of notice of the acceptability of the Work.

E. *Final Payment Becomes Due*: ~~Upon receipt from Engineer of the final Application for Payment and accompanying documentation, Owner shall set off against the amount recommended by Engineer for final payment any further sum to which Owner is entitled, including but not limited to set-offs for liquidated damages and set-offs allowed under the provisions of this Contract with respect to progress payments. Owner shall pay the resulting balance due to Contractor within 30 days of Owner's receipt of the final Application for Payment from Engineer~~.

1. After the presentation to Owner of the Application for Payment and accompanying documentation, the amount recommended by Engineer will become due and, when due, will be paid by Owner to Contractor in accordance with the Louisiana Public Contract Statute.

2. Following acceptance of the Work by Owner, Contractor shall file the acceptance with the Clerk of Court and Ex-Officio Recorder of Mortgages.

3. Release and payment of Retainage, or balance due, will become due and will be paid by Owner to Contractor thirty days after receipt of Application for Retainage Payment (which must include a clear lien and privilege certificate secured from the Clerk of Court and Ex-Officio Recorder of Mortgages dated no less than forty-five (45) days after the filing of the acceptance and other documentation as required by the Contract Documents), and recommendation of payment by Engineer.

15.07 *Waiver of Claims*

A. By making final payment, Owner waives its claim or right to liquidated damages or other damages for late completion by Contractor, except as set forth in an outstanding Claim, appeal under the provisions of Article 17, set-off, or express reservation of rights by Owner. Owner reserves all other claims or rights after final payment.

B. The acceptance of final payment by Contractor will constitute a waiver by Contractor of all claims and rights against Owner other than those pending matters that have been duly submitted as a Claim, or appealed under the provisions of Article 17.

15.08 *Correction Period*

A. The parties agree that: (a) any and all defects discovered in the Work within one year ~~the first three (3) years~~ after the issuance of the certificate of substantial completion are not due to the fault, negligence, and/or lack of maintenance by Owner; (b) any and all such defects in the Work are presumed to be due to the fault, negligence and/or unworkmanlike performance by Contractor; and (c) Contractor shall bear the burden of proof that any such defects are due to the fault, negligence, breach of the standard of care, and/or unworkmanlike performance by any person(s) or entity(ies) other than Contractor. If within one year ~~three (3) years~~ after the date of Substantial Completion (or such longer period of time as may be prescribed by the Supplementary Conditions or the terms of any applicable special guarantee required by the Contract Documents), Owner gives Contractor written notice that any Work has been found to be defective, or that Contractor's repair of any damages to the Site or adjacent areas has been found to be defective, then after receipt of such notice of defect Contractor shall promptly, without cost to Owner and in accordance with Owner's written instructions:

1. correct the defective repairs to the Site or such adjacent areas;

2. correct such defective Work;

3. remove the defective Work from the Project and replace it with Work that is not defective, if the defective Work has been rejected by Owner, and

4. satisfactorily correct or repair or remove and replace any damage to other Work, to the work of others, or to other land or areas resulting from the corrective measures.

B. Owner shall give any such notice of defect within 60 days of the discovery that such Work or repairs is defective. If such notice is given within such 60 days but after the end of the correction period, the notice will be deemed a notice of defective Work under Paragraph 7.17.B.

C. If, after receipt of a notice of defect within 60 days and within the correction period, Contractor does not promptly comply with the terms of Owner's written instructions, or in an emergency where delay would cause serious risk of loss or damage, Owner may have the defective Work corrected or repaired or may have the rejected Work removed and replaced. Contractor shall pay all costs, losses, and damages (including but not limited to all fees and charges of engineers, architects, attorneys, and other professionals and all court or other dispute resolution costs) arising out of or relating to such correction or repair or such removal and replacement (including but not limited to all costs of repair or replacement of work of others). Contractor's failure to pay such costs, losses, and damages within 10 days of invoice from Owner will be deemed the start of an event giving rise to a Claim under Paragraph 12.01.B, such that any related Claim must be brought within 30 days of the failure to pay.

D. In special circumstances where a particular item of equipment is placed in continuous service for the benefit of Owner before Substantial Completion of all the Work, the correction period for that item may start to run from an earlier date if so provided in the Specifications.

E. Where defective Work (and damage to other Work resulting therefrom) has been corrected or removed and replaced under this paragraph, the correction period hereunder with respect to such Work will be extended for an additional period of one year after such correction or removal and replacement has been satisfactorily completed.

F. Contractor's obligations under this paragraph are in addition to all other obligations and warranties. The provisions of this paragraph are not to be construed as a substitute for, or a waiver of, the provisions of any applicable statute of limitation or repose.

ARTICLE 16—SUSPENSION OF WORK AND TERMINATION

16.01 *Owner May Suspend Work*

A. At any time and without cause, Owner may suspend the Work or any portion thereof for a period of not more than 90 consecutive days by written notice to Contractor and Engineer. Such notice will fix the date on which Work will be resumed. Contractor shall resume the Work on the date so fixed. Contractor shall be entitled to an adjustment in the Contract Price or an extension of the Contract Times directly attributable to any such suspension. Any Change Proposal seeking such adjustments must be submitted no later than 30 days after the date fixed for resumption of Work.

16.02 *Owner May Terminate for Cause*

A. The occurrence of any one or more of the following events will constitute a default by Contractor and justify termination for cause:

1. Contractor's persistent failure to perform the Work in accordance with the Contract Documents (including, but not limited to, failure to supply sufficient skilled workers or suitable materials or equipment, or failure to adhere to the Progress Schedule);

2. Failure of Contractor to perform or otherwise to comply with a material term of the Contract Documents;

3. Contractor's disregard of Laws or Regulations of any public body having jurisdiction; or

4. Contractor's repeated disregard of the authority of Owner or Engineer.

B. If one or more of the events identified in Paragraph 16.02.A occurs, then after giving Contractor (and any surety) 10 days' written notice that Owner is considering a declaration that Contractor is in default and termination of the Contract, Owner may proceed to:

1. declare Contractor to be in default, and give Contractor (and any surety) written notice that the Contract is terminated; and

2. enforce the rights available to Owner under any applicable performance bond.

C. Subject to the terms and operation of any applicable performance bond, if Owner has terminated the Contract for cause, Owner may exclude Contractor from the Site, take possession of the Work, incorporate in the Work all materials and equipment stored at the Site or for which Owner has paid Contractor but which are stored elsewhere, and complete the Work as Owner may deem expedient.

D. Owner may not proceed with termination of the Contract under Paragraph 16.02.B if Contractor within 7 days of receipt of notice of intent to terminate begins to correct its failure to perform and proceeds diligently to cure such failure.

E. If Owner proceeds as provided in Paragraph 16.02.B, Contractor shall not be entitled to receive any further payment until the Work is completed. If the unpaid balance of the Contract Price exceeds the cost to complete the Work, including all related claims, costs, losses, and damages (including but not limited to all fees and charges of engineers, architects, attorneys, and other professionals) sustained by Owner, such excess will be paid to Contractor. If the cost to complete the Work including such related claims, costs, losses, and damages exceeds such unpaid balance, Contractor shall pay the difference to Owner. Such claims, costs, losses, and damages incurred by Owner will be reviewed by Engineer as to their reasonableness and, when so approved by Engineer, incorporated in a Change Order. When exercising any rights or remedies under this paragraph, Owner shall not be required to obtain the lowest price for the Work performed.

F. Where Contractor's services have been so terminated by Owner, the termination will not affect any rights or remedies of Owner against Contractor then existing or which may thereafter accrue, or any rights or remedies of Owner against Contractor or any surety under any payment bond or performance bond. Any retention or payment of money due Contractor by Owner will not release Contractor from liability.

G. If and to the extent that Contractor has provided a performance bond under the provisions of Paragraph 6.01.A, the provisions of that bond will govern over any inconsistent provisions of Paragraphs 16.02.B and 16.02.D.

H. The costs incurred by Owner due to Contractor's default, including attorney's fees, or for completing the Work under the Contract, will be deducted from any monies due or which may become due the Contractor. When this expense exceeds the sum which would have been payable under the Contract, the Contractor and surety shall be liable and shall pay Owner the amount of such excess.

16.03 *Owner May Terminate for Convenience*

A. Upon 7 days' written notice to Contractor and Engineer, Owner may, without cause and without prejudice to any other right or remedy of Owner, terminate the Contract. In such case, Contractor shall be paid for (without duplication of any items):

1. completed and acceptable Work executed in accordance with the Contract Documents prior to the effective date of termination, including fair and reasonable sums for overhead and profit on such Work;

2. expenses sustained prior to the effective date of termination in performing services and furnishing labor, materials, or equipment as required by the Contract Documents in connection with uncompleted Work, plus fair and reasonable sums for overhead and profit on such expenses; and

3. other reasonable expenses directly attributable to termination, including costs incurred to prepare a termination for convenience cost proposal.

B. Contractor shall not be paid for any loss of anticipated profits or revenue, post-termination overhead costs, or other economic loss arising out of or resulting from such termination.

16.04 *Contractor May Stop Work or Terminate*

A. If, through no act or fault of Contractor, (1) the Work is suspended for more than 90 consecutive days by Owner or under an order of court or other public authority, or (2) Engineer fails to act on any Application for Payment within 30 days after it is submitted, or (3) Owner fails for 30 days to pay Contractor any sum finally determined to be due, then Contractor may, upon 7 days' written notice to Owner and Engineer, and provided Owner or Engineer do not remedy such suspension or failure within that time, terminate the contract and recover from Owner payment on the same terms as provided in Paragraph 16.03.

B. In lieu of terminating the Contract and without prejudice to any other right or remedy, if Engineer has failed to act on an Application for Payment within 30 days after it is submitted, or Owner has failed for 30 days to pay Contractor any sum finally determined to be due, Contractor may, 7 days after written notice to Owner and Engineer, stop the Work until payment is made of all such amounts due Contractor, including interest thereon. The provisions of this paragraph are not intended to preclude Contractor from submitting a Change Proposal for an adjustment in Contract Price or Contract Times or otherwise for expenses or damage directly attributable to Contractor's stopping the Work as permitted by this paragraph.

ARTICLE 17—INTENTIONALLY OMITTED

ARTICLE 18—MISCELLANEOUS

18.01 *Giving Notice*

A. Whenever any provision of the Contract requires the giving of written notice to Owner, Engineer, or Contractor, it will be deemed to have been validly given only if delivered:

1. in person, by a commercial courier service or otherwise, to the recipient's place of business;

2. by registered or certified mail, postage prepaid, to the recipient's place of business; or

3. by e-mail to the recipient, with the words "Formal Notice" or similar in the e-mail's subject line.

18.02 *Computation of Times*

A. When any period of time is referred to in the Contract by days, ~~it will be computed to exclude the first and include the last day of such period. If the last day of any such period falls on a Saturday or Sunday or on a day made a legal holiday by the law of the applicable jurisdiction, such day will be omitted from the computation~~ the date of the act, event, or default after which the period begins to run is not included. The last day of the period is to be included, unless it is a Saturday, Sunday, or legal holiday, in which event the period runs until the end of the next day which is not a legal holiday.

18.03 *Cumulative Remedies*

A. The duties and obligations imposed by these General Conditions and the rights and remedies available hereunder to the parties hereto and, in particular but without limitation, the warranties, guarantees, and obligations imposed upon Contractor hereunder and all of the rights and remedies available to Owner and Engineer thereunder are in addition to, and are not to be construed in any way as a limitation of, any rights and remedies available to any or all of them which are otherwise imposed or available by Laws or Regulations, by special warranty or guarantee, or by other provisions of the Contract. The provisions of this paragraph will be as effective as if repeated specifically in the Contract Documents in connection with each particular duty, obligation, right, and remedy to which they apply.

18.04 *Limitation of Damages*

A. With respect to any and all Change Proposals, Claims, disputes subject to final resolution, and other matters at issue, neither Owner nor Engineer, nor any of their officers, directors, members, partners, employees, agents, consultants, or subcontractors, shall be liable to Contractor for any claims, costs, losses, or damages sustained by Contractor on or in connection with any other project or anticipated project.

18.05 *No Waiver*

A. A party's non-enforcement of any provision will not constitute a waiver of that provision, nor will it affect the enforceability of that provision or of the remainder of this Contract.

18.06 *Survival of Obligations*

A. All representations, indemnifications, warranties, and guarantees made in, required by, or given in accordance with the Contract, as well as all continuing obligations indicated in the Contract, will survive final payment, completion, and acceptance of the Work or termination of the Contract or of the services of Contractor.

B. Nothing herein, in the Agreement, or any of the other Contract Documents shall be construed as a waiver, modification, or alteration of the CONTRACTOR's or its surety's obligations under La. R.S. 38:2189. Nothing in this paragraph or any other provision in the General Conditions or other Contract Documents concerning any specific time periods shall establish a period of limitation with respect to any other obligation which CONTRACTOR has under the Contract Documents. The establishment of time periods relates only to the specific obligations of CONTRACTOR to correct the Work, and has no relationship to the time within which CONTRACTOR's obligations under the Contract Documents may be sought to be enforced, nor

to the time within which the proceedings may be commenced to establish CONTRACTOR's liability with respect to CONTRACTOR's obligations other than specifically to correct the Work.

18.07 *Controlling Law*

A. This Contract is to be governed by ~~the law of the state in which the Project is located~~ Louisiana law.

18.08 *Assignment of Contract*

A. Unless expressly agreed to elsewhere in the Contract, no assignment by a party to this Contract of any rights under or interests in the Contract will be binding on the other party without the written consent of the party sought to be bound; and, specifically but without limitation, money that may become due and money that is due may not be assigned without such consent (except to the extent that the effect of this restriction may be limited by law), and unless specifically stated to the contrary in any written consent to an assignment, no assignment will release or discharge the assignor from any duty or responsibility under the Contract.

18.09 *Successors and Assigns*

A. Owner and Contractor each binds itself, its successors, assigns, and legal representatives to the other party hereto, its successors, assigns, and legal representatives in respect to all covenants, agreements, and obligations contained in the Contract Documents.

18.10 *Headings*

A. Article and paragraph headings are inserted for convenience only and do not constitute parts of these General Conditions.

SUPPLEMENTARY CONDITIONS
OF THE CONSTRUCTION CONTRACT

These Supplementary Conditions amend or supplement EJCDC® C-700, Standard General Conditions of the Construction Contract (2018), as edited for Jefferson Parish. The General Conditions remain in full force and effect except as amended.

The terms used in these Supplementary Conditions have the meanings stated in the General Conditions. Additional terms used in these Supplementary Conditions have the meanings stated below, which are applicable to both the singular and plural thereof.

SC-4.05 Amend Paragraph 4.05.C by adding the following subparagraphs:

5. *Weather-Related Delays*

a. The Contractor acknowledges and agrees that weather conditions shall not be an automatic cause for time extension. The Contract Times specified in the Bidding Documents and Contract Documents include an allowance as stated in those documents for inclement weather. In order to document and claim days lost to inclement weather conditions, the Contractor shall, on a semi-monthly basis, submit a report to the Engineer, stating the time lost to inclement weather, within seven (7) days of the end of the report period. The Engineer will review the report for submittal to the Owner within seven days of receipt of the report and make recommendations for either acceptance or rejection of each claimed time period lost to inclement weather. The Owner will then instruct the Engineer to approve or reject the report. There shall be no additional compensation due the Contractor for inclement weather days allowed hereunder.

b. The report for lost days due to inclement weather shall account for all days during the reporting period, including weekends and holidays. Claims for lost days on either weekends or holidays will not be considered unless the Contractor can show that the inclement weather affected work production on the following workday. The reporting periods shall be from the first day of the month through and including the last day of the month. Lost time accounting shall be in one-half day increments.

c. Lost time shall be considered only if the weather occurrence is in excess of the normal weather patterns as established by the nearest office of the National Weather Service, U.S. Department of Commerce. When the Contract utilizes critical path method scheduling (C.P.M.), the Engineer will determine if the days lost due to weather conditions actually affected the critical path activities. If weather conditions did not affect the progress of the critical path activities, no time extension will be granted.

SC-5.03 Add the following new paragraphs immediately after Paragraph 5.03.E:

F. Unless otherwise provided by Contractor in accordance with the Special Provisions section as included in the Specifications, the following table lists the reports of explorations and tests of subsurface conditions at or adjacent to the Site that contain Technical Data, and specifically identifies the Technical Data in the report upon which Contractor may rely: **[If there are no such reports, so indicate in the table.]**

Report Title	Date of Report	Technical Data
		[Identify Technical Data]

G. Unless otherwise provided by Contractor in accordance with the Special Provisions section as included in the Specifications, the following table lists the drawings of existing physical conditions at or adjacent to the Site, including those drawings depicting existing surface or subsurface structures at or adjacent to the Site (except Underground Facilities), that contain Technical Data, and specifically identifies the Technical Data upon which Contractor may rely: **[If there are no such drawings, so indicate in the table.]**

Drawings Title	Date of Drawings	Technical Data
		[Identify Technical Data]

H. Contractor may examine copies of reports and drawings identified in SC-5.03.F and SC-5.03.G that were not included with the Bidding Documents at **[location]** during regular business hours, or may request copies from Engineer. These reports and drawing are not part of the Contract Documents, but the Technical Data contained therein upon which Contractor is entitled to rely as identified and established above are incorporated therein by reference. Contractor is not entitled to rely upon other information and data utilized in the preparation of the Drawings and Specifications.

SC-5.06 Add the following new paragraphs immediately after Paragraph 5.06.A.3:

4. Unless otherwise provided by Contractor in accordance with the Special Provisions section as included in the Specifications, the following table lists the reports known to Owner relating to Hazardous Environmental Conditions at or adjacent to the Site, and the Technical Data (if any) upon which Contractor may rely: **[If there are no such reports, so indicate in the table]**

Report Title	Date of Report	Technical Data
		[Identify Technical Data]

5. Unless otherwise provided by Contractor in accordance with the Special Provisions section as included in the Specifications, the following table lists the drawings known to Owner relating to Hazardous Environmental Conditions at or adjacent to the Site, and Technical Data (if any) contained in such Drawings upon which Contractor may rely: **[If there are no such drawings, so indicate in the table]**

Drawings Title	Date of Drawings	Technical Data
		[Identify Technical Data]

SC-10.03 See Exhibit A.

SC-13.01 Supplement Paragraph 13.01.B.5.c.(2) by adding the following sentence:

The equipment rental rate book that governs the included costs for the rental of machinery and equipment owned by Contractor (or a related entity) under the Cost of the Work provisions of this Contract is the most current edition of the Equipment Rental Rate book**.**

SC-15.01.B.5

Pursuant to the reference in paragraph 15.01.B.5.a of the Standard General Conditions, the aggregate cost of materials stored offsite shall not at any time exceed **$ 250,000.00,** without the written approval of the Owner.

SC-19. *Non-Work Days:* Non-work days shall be defined as days in which the Contractor worked less than four (4) hours due to inclement weather conditions.

SC-20 *Removal and Disposal of Structures and Obstructions*

A. General

The Contractor shall remove any existing structure or part of structure, fence, building, or other encumbrances or obstructions that interfere in any way with the new construction. Compensation for the removal of any structure not listed as a pay item in the Proposal and with a Contract Bid Price shall be included in the Contract unit prices bid for the pay items of the Work.

B. Privately and Publicly Owned Materials

If called for in the Special Conditions, all privately and publicly owned materials in structures removed shall be salvaged without damage and shall be piled neatly and in an acceptable manner upon the premises if it belongs to an abutting property owner, otherwise at accessible points along the improvements. Material in structures which is property of the Owner or property of any public body, private body, or individual which is fit for use elsewhere, shall remain property of the original owner. It shall be carefully

removed without damage, in sections, which may be readily transported, and shall be piled neatly in an accessible point by the Contractor. When materials of Owner, State, Municipality, or Parish are stored on or beyond the right of way, the Contractor will be held responsible for their care and preservation for a period of ten (10) days following the day the last or final portion of the materials stored at a particular location are placed thereon. When privately owned materials are stored beyond the right of way, the Contractor will be held responsible for their care and preservation for a period of ten (10) days (computed as set forth above); provided, however, that as of the day the ten (10) days responsibility period for care and preservation of the materials begins, the Contractor must furnish the Engineer with evidence satisfactory to the latter that the proper owner of the materials has been duly notified by the Contractor that the said owner must assume responsibility for his materials on the date following the Contractor's ten (10) day responsibility.

SC-21 *Public Convenience and Safety*

A. Care of Traffic

No road shall be closed by the Contractor to the public except by written permission of the Engineer and/or Architect, and except while so closed, the Contractor shall maintain traffic over, through, or around the work included in his Contract, with the maximum practical convenience, for the full twenty-four hours of each day of the Contract, whether or not work has ceased temporarily. The Contractor shall notify the Engineer at the earliest possible date after the Contract has been executed, and in any case before the starting of any construction that might in any way inconvenience or endanger traffic, so that the necessary arrangements may be determined.

B. General Public

The convenience of the general public and of residents along the Work shall be provided for in a reasonable adequate and satisfactory manner. Where existing roads are not available for use as detours, unless otherwise provided, all traffic shall be permitted to pass through the Work. In such cases the vehicles of the traveling public shall have precedence over Contractor's vehicles to the end that the traveling public's vehicles shall not be unduly delayed for the convenience of the Contractor. In order that all unnecessary delay to the traveling public may be avoided, where ordered by the Engineer, the Contractor shall provide and station competent flagmen whose sole duties shall consist of directing and controlling the movement of public traffic either through or around the Work.

C. Temporary Roads, Driveways, etc.

The Contractor shall provide and maintain, in a manner approved and deemed practicable by the Engineer, such temporary roads as may be necessary to provide convenient access to driveways, houses, buildings, or other property abutting the work. Where temporary bridges are necessary for traffic and pedestrians, these bridges shall be constructed at the expense of the Contractor as directed by the Engineer.

D. Arranging the Work

The Contractor shall arrange his work so that no undue or prolonged blocking of business establishments will occur.

E. Storage of Materials

Materials and equipment stored on the right of way or Project Site shall be so placed and the Work at all times shall be so conducted as to insure minimum danger and obstruction to the traveling public.

F. Control During Work

During grading operations where traffic is being permitted to pass through construction, the Contractor shall provide a smooth, even surface that will provide a satisfactory passageway for use of traffic. The roadbed shall be sprinkled with water if necessary to prevent a dust nuisance, provided the dust nuisance is a result of the Work.

G. Fire Protection

Fire hydrants shall be accessible at all times to the Fire Department. No material or other obstructions shall be placed closer to a fire hydrant than permitted by ordinances, rules, or regulations or within fifteen (15') feet of a fire hydrant, in the absence of such ordinances, rules, or regulations.

SC-22 *Structures at Railroad Crossings*

A. Notification

No Work of any character shall be commenced on railroad right of way until the Railroad Company has issued a permit to the Owner and has been duly notified by the Contractor in writing (with a copy forwarded to the Engineer) of the date he proposes to begin work, and until an authorized representative of the Railroad Company is present, unless the Railroad Company waives such requirement.

B. Inspection by Railroad Company

All Work performed by the Contractor within the right of way limits of the railroad shall be subject to the inspection and approval of the chief engineer of the Railroad Company, or his authorized representative and any precautions considered necessary by said chief engineer to safeguard the property, equipment, employees, and passengers of the Railroad Company shall be taken by the Contractor without extra compensation.

C. Cooperation with Railroad Company

The Contractor shall, without extra compensation, take such precautions and erect and maintain such telltale or warning devices as the Railroad Company considers necessary to safeguard the operation of its trains. The temporary vertical and horizontal clearances

specified by the chief engineer of the Railroad Company in approving these shall be maintained at all times. No steel, brick, pipe, or any other loose material shall be left on the ground in the immediate vicinity of the railway tracks.

D. Insurance

Before any Work is done within Railroad right of way, the Contractor shall provide and pay all costs of any special insurance requirements of the Railroad.

SC-23 *Protection and Restoration of Property and Landscape*

A. Contractor's Responsibility

The Contractor shall not enter upon private property for any purpose without first obtaining permission from the owners and lessees. The Contractor shall use every precaution necessary for the preservation of all public and private property, monuments, highway signs, telephone lines, other utilities, etc., along and adjacent to the Work; shall use every precaution necessary to prevent damage to pipes, conduits, and other underground structures; and shall protect carefully from disturbance or damage all land monuments and property marks until an authorized agent has witnessed or otherwise referenced their location and shall not remove them until directed. The street and highway signs and markers that are to be affected by the Work shall be carefully removed when the Work begins and stored in a manner to keep them clean and dry. The Contractor must obtain all necessary information in regard to existing utilities, and shall give notice in writing to the owners or the proper authorities in charge of streets, gas, water, pipes, electric, sewers, and other underground structures, including conduits, railways, poles and pole lines, manholes, catch basins, fixtures, appurtenances, and all other property that may be affected by the Contractor's operations, at least forty-eight (48) hours before his operations will affect such property. The Contractor shall not hinder or interfere with any person in the protection of such work or with the operation of utilities, at any time. When property or the operation of railways, telephone lines, telegraph lines, or other public utilities are endangered, the Contractor shall, at his own expense, maintain flagmen or watchmen and any other necessary precautions to avoid interruption of service or damage to life or property, and he shall promptly repair, restore, or make good any injury or damage caused by his negligent operations in an acceptable manner. The Contractor must also obtain all necessary information in regard to the installation of new cables, conduits, and transformers, and make proper provision and give proper notifications, so that these can be installed at the proper time without delay to the Contractor or unnecessary inconvenience to the Owner.

B. Undercutting Buildings

Where provided in Special Conditions, when the work involves the undercutting of any buildings along the Work, the Contractor must give property owners and lessees due and sufficient notice of the undercutting and the Contractor shall adequately support such buildings. The Contractor and his Surety shall hold the Owner and their representatives harmless from any damages resulting from undercutting any such buildings.

C. Trees, Shrubs, Plants, or Grass

The Contractor shall not remove, injure, cut, or destroy trees, shrubs, plants, or grass that are to remain in the streets or those which are privately owned, without proper authority. Unless otherwise provided in the Special Provisions or the Proposal, the Contractor shall replace and replant all plants, shrubs, and grass and restore the grounds back to its original good condition to the satisfaction of the Owner and property owner. The Contractor shall assume the responsibility of replanting and guarantees that plants, shrubs, and grass will be watered, fertilized, and cultivated until they are in a growing condition. No direct payment will be made for removing and replanting of trees, shrubs, plants, or grass unless such items are set forth in the Proposal.

D. Reparation

When or where any direct damage or injury is done to public or private property by or on account of any negligent act, omission, neglect, or otherwise of the Contractor, he shall make good such damage or injury in an acceptable manner. In case of failure on the part of the Contractor to restore such property or make good such damage, the Owner may upon forty-eight (48) hours' notice proceed to repair, rebuild, or otherwise restore such property as may be deemed necessary, and the cost thereof will be deducted from any monies due or which may become due under the Contract. The Contractor shall indemnify and save harmless the Owner, or the Design Professional acting in behalf of the Owner, from all suits and actions that may be brought against it by reason of any injury, or alleged injury, to the person or property of another resulting from negligence or carelessness in the execution of the Work, or on account of any negligent act or omission, or from improper methods or means of construction on the part of the Contractor, his representatives, or employees. The Contractor shall have the sole responsibility of determining the best and proper method or means of construction and the Owner, or the Design Professional acting on behalf of the Owner, shall not be held responsible for determining or suggesting a method or means of construction, except as expressly indicated in the Contract Documents

SC-24 *Barricades, Danger, Warning, and Detour Signs*

A. General

The Contractor shall, without extra compensation, provide, erect, paint, and maintain all necessary barricades. Also without extra compensation, the Contractor shall provide suitable and sufficient lights, torches, reflectors, or other danger signals and signs, provide a sufficient number of watchmen and flagmen, and take all necessary precautions for the protection of the Work and safety of the public.

B. Warning Signs, Painting, Illumination

The Contractor shall erect warning signs beyond the limits of the Project, sufficiently in advance of any place on the Project where operations interfere with the use of the road by traffic, including all intermediate points where the new Work crosses or coincides with the existing road. Barricades shall be kept well painted and suitable warning signs shall

be placed thereon. All barricades and obstructions shall be illuminated at night and all lights or devices for this purpose shall be kept burning from sunset to sunrise.

C. Hazards and Compensation

Whenever traffic is maintained through or over any part of the project, the CONTRACTOR shall clearly mark all traffic hazards. No direct payment will be made for barricades, signs, and illumination therefor, or for watchmen or flagmen.

SC-25 *Affidavit Attesting That Public Contract Not Secured Through Employment or Payment of Solicitor (LSA R.S. 38:2224):* The Contractor warrants that (1) he has not employed or retained any person, corporation, firm, association, company or other organization, either directly or indirectly, to secure this Contract, other than persons regularly employed by the Contractor and whose services were in the regular course of their duties for the Contractor and (2) that no part of the Contract Price received by Contractor was paid or will be paid to any person, corporation, firm, association, company or other organization, either directly or indirectly any fee, commission, percentage, brokerage fee, gifts, or any other consideration, contingent upon or resulting from the award or making of this Contract or to solicit or secure this Contract, other than the payment of their normal compensation to persons regularly employed by the Contractor whose services in connection with this Contract were in the regular course of their duties for Contractor. For breach or violation of this warranty, the Owner shall have the right to annul this Contract without liability.

SC-26 *Historical or Archaeological Deposits*: If, during the course of construction, evidence of deposits of historical or archaeological interest is found, Contractor shall cease operations affecting the find and shall notify Owner, who shall notify the State Historic Preservation Officer. No further disturbance of the deposits shall ensue until Contractor has been notified by Owner that he may proceed. Owner will issue a notice to proceed only after the state official has surveyed the find and made a determination to the Owner. Compensation to Contractor, if any, for lost time or changes in construction to avoid the find, shall be determined in accordance with changed conditions or Change Order provisions of the Contract Documents.

SC-27 *Additional Liquidated Damages*: Contractor shall owe the amounts set forth in ARTICLE VII of the Agreement for each of the following items:

(1) Extended architectural and/or engineering fees;
(2) Extended Resident Project Representative fees;
(3) Extended construction management fees;
(4) Extended Owner's overhead and personnel expenses; and
(5) Owner's other costs directly related to the delay in completion beyond the Contract Times.

SC-28 *Removal/Relocation of Trees on Public Property:* The Director of the Jefferson Parish Parkways Department shall be contacted and advised of trees that are on public property prior to the removal/relocation of such trees by the Contractor. Furthermore, the Department of Parkways shall be given a reasonable period of time to respond and when necessary remove the trees.

SC-29 *Road Closure*: In the event that it becomes necessary to close any roadway or partially close any major road due to scheduled construction work being performed by Contractor the public must be notified and made aware of the closure in a timely manner. In order to utilize both the print and electronic media to disseminate this information to the public, the Jefferson Parish Public Information Office must receive pertinent information from the Contractors concerning the closure. Notice of a road closure or partial road closure of a major road must be sent to Jefferson Parish in care of its Public Information Officer, 1221 Elmwood Park Blvd., Suite 1002, Jefferson, Louisiana 70123. THAT NOTIFICATION MUST CONTAIN THE FOLLOWING INFORMATION AND MUST BE RECEIVED BY THE PUBLIC INFORMATION OFFICE AT LEAST 10 DAYS PRIOR TO THE SCHEDULED CLOSURE:

(a) Name of the Contractor, engineer, etc., involved in the work/project who is responsible for the action.
(b) A brief description of the project (Example: "...drain line installation," "...to remove and replace concrete slabs," etc.)
(c) The date and time the action will take place and when re-opening is scheduled. (Example. "...will be closed from 6 a.m. on Friday, July 23, 1999 to 8 p.m. on Monday, July 26, 1999.")
(d) The exact location of action. (Example: "...closed on David Drive from W. Napoleon Avenue to Veterans Memorial Boulevard," or "...the 900 block of David Drive")
(e) Define the action that will be taken. (Example: eastbound, westbound, inside or outside lanes or both, etc.)
(f) If the roadway will be closed completely to traffic and a detour will be in effect, a map illustrating the detour route must accompany the information.
(g) Contact person for additional information.

EXHIBIT A

TO SUPPLEMENTARY CONDITIONS

OF THE CONSTRUCTION CONTRACT

Duties, Responsibilities and Limitations of
Authority of Resident Project Representative

The Resident Project Representative (RPR) will be Engineer's representative at the Site. RPR's dealings in matters pertaining to the Work in general will be with Engineer and Contractor. RPR's dealings with Subcontractors will only be through or with the full knowledge or approval of Contractor. RPR shall generally communicate with Owner with the knowledge of and under the direction of Engineer. The RPR will:

1. *Conferences and Meetings:* Attend meetings with Contractor, such as preconstruction conferences, progress meetings, job conferences, and other Project-related meetings (but not including Contractor's safety meetings), and as appropriate prepare and circulate copies of minutes thereof.

2. *Safety Compliance:* Comply with Site safety programs, as they apply to RPR, and if required to do so by such safety programs, receive safety training specifically related to RPR's own personal safety while at the Site.

3. *Liaison*

    a. Serve as Engineer's liaison with Contractor. Working principally through Contractor's authorized representative or designee, assist in providing information regarding the provisions and intent of the Contract Documents.

    b. Assist Engineer in serving as Owner's liaison with Contractor when Contractor's operations affect Owner's on-Site operations.

    c. Assist in obtaining from Owner additional details or information, when required for Contractor's proper execution of the Work.

4. *Review of Work; Defective Work*

    a. Conduct on-Site observations of the Work to assist Engineer in determining, to the extent set forth in Paragraph 10.02, if the Work is in general proceeding in accordance with the Contract Documents.

    b. Observe whether any Work in place appears to be defective.

    c. Observe whether any Work in place should be uncovered for observation, or requires special testing, inspection or approval.

d. Report to Engineer whenever RPR believes that any Work will not produce a completed Project that conforms generally to the Contract Documents or will prejudice the integrity of the design concept of the completed Project as a functioning whole as indicated in the Contract Documents, or has been damaged, or does not meet the requirements of any inspection, test or approval required to be made; and advise Engineer of Work that RPR believes should be corrected or rejected or should be uncovered for observation, or requires special testing, inspection or approval.

5. *Inspections and Tests*

a. Observe Contractor-arranged inspections required by Laws and Regulations, including but not limited to those performed by public or other agencies having jurisdiction over the Work.

b. Accompany visiting inspectors representing public or other agencies having jurisdiction over the Work.

6. *Shop Drawings and Samples*

a. Record date of receipt of Shop Drawings and Samples.

b. Receive Samples, which are furnished at the Site by Contractor, and notify Engineer of availability of Samples for examination.

c. Advise Engineer and Contractor of the commencement of any Work requiring a Shop Drawing or Sample if the submittal has not been approved by Engineer.

7. *Interpretation of Contract Documents:* Report to Engineer when clarifications and interpretations of the Contract Documents are needed and transmit to Contractor clarifications and interpretations as issued by Engineer.

8. *Modifications:* Consider and evaluate Contractor's suggestions for modifications in Drawings or Specifications and report with RPR's recommendations to Engineer. Transmit to Contractor in writing decisions as issued by Engineer.

9. *Records*

a. Maintain at the job Site orderly files for correspondence, reports of job conferences, Shop Drawings and Samples, reproductions of original Contract Documents including all Work Change Directives, Addenda, Change Orders, Field Orders, additional Drawings issued subsequent to the execution of the Contract, Engineer's clarifications and interpretations of the Contract Documents, progress

reports, Shop Drawing submittals received from and delivered to Contractor and other Project related documents.

b. Prepare a daily report or keep a diary or log book, recording Contractors hours on the job site, weather conditions, data relative to questions of Work Change Directives, Change Orders or changed conditions, list of job Site visitors, daily activities, decisions, observations in general, and specific observations in more detail as in the case of observing test procedures; and send copies to Engineer.

c. Record names, addresses and telephone numbers of all contractors, subcontractors and major suppliers of materials and equipment.

10. *Reports*

a. Furnish to Engineer periodic reports as required of progress of the Work andof Contractor's compliance with the progress schedule and schedule of Shop Drawing and Sample submittals.

b. Consult with Engineer in advance of scheduled major tests, inspections or start of important phases of the Work.

c. Draft proposed Change Orders and Work Change Directives, obtaining backup material from Contractor and recommend to Engineer Change Orders, Work Change Directives, and Field Orders.

d. Report immediately to Engineer and Owner the occurrence of any accident.

11. *Payment Requests:* Review Applications for Payment with Contractor.

12. *Certificates, Maintenance and Operation Manuals:* During the course of the Work, verify that certificates, maintenance and operation manuals and other data required to be assembled and furnished by Contractor are applicable to the items actually installed and in accordance with the Contract Documents, and have this material delivered to Engineer for review and forwarding to Owner prior to final payment for the Work.

13. *Completion*

a. Participate in Engineer's visits regarding Substantial Completion.

b. Assist in the preparation of a punch list of items to be completed or corrected.

c. Participate in Engineer's visit to the Site in the company of Owner and Contractor regarding completion of the Work, and prepare a final punch list of items to be completed or corrected by Contractor.

d. Observe whether items on the final punch list have been completed or corrected.

14. The RPR will not:

a. Authorize any deviation from the Contract Documents or substitution of materials or equipment (including “or-equal” items).

b. Exceed limitations of Engineer’s authority as set forth in the Contract Documents.

c. Undertake any of the responsibilities of Contractor, Subcontractors, or Suppliers.

d. Advise on, issue directions relative to, or assume control over any aspect of the means, methods, techniques, sequences or procedures of construction.

e. Advise on, issue directions regarding, or assume control over security or safety practices, precautions, and programs in connection with the activities or operations of Owner or Contractor.

f. Participate in specialized field or laboratory tests or inspections conducted off-site by others except as specifically authorized by Engineer.

g. Authorize Owner to occupy the Project in whole or in part.

FORM OF AGREEMENT
BETWEEN
THE PARISH OF JEFFERSON
AND
[INSERT NAME OF VENDOR]

THIS AGREEMENT is made as of the date of full execution by the parties, as evidenced by the electronic signatures by and between the Parish of Jefferson, State of Louisiana, hereinafter called "OWNER", duly represented herein by _____, Chairman of Jefferson Parish Council, duly authorized to act by virtue of Resolution No. _____, adopted on the ____ day of _____, 20__, which is made a part hereof, and *insert contractor's legal name*, represented by *contractor's representative's name*, *representative's title*, hereinafter called "CONTRACTOR".

NOW THEREFORE, in consideration of the compensation to be paid to CONTRACTOR and of the mutual agreements herein contained, the parties hereby agree as follows:

SECTION 1. SCOPE OF WORK

A. OWNER, through the Chairman of the Jefferson Parish Council, _____, by virtue of Resolution No. _____, does hereby grant and confirm unto CONTRACTOR an Agreement to perform the Work under Project No. _____, Proposal No. 50-_____, for _____ *name of project*, as per the General Conditions, any Supplementary Conditions, the Drawings, and Specifications on file in the Office of the Chief Buyer for the Parish of Jefferson for the bid amount of $_____ in accordance with the CONTRACTOR's written bid proposal dated _____, which is made a part hereof by reference.

B. The CONTRACTOR, its successors and assigns shall perform all Work, including the assumption of all obligations, duties and responsibilities necessary to the successful completion of the Contract and the furnishing of all materials and equipment required to be incorporated in and to form a permanent part of the Work; tools, equipment, supplies, transportation, facilities, labor, superintendence and services required to perform the Work; and Bond, insurance and submittals; all as indicated or specified in the Contract Documents to be performed or furnished by CONTRACTOR for the Work included in and covered by OWNER's official award of this Contract to CONTRACTOR; such award being based on the acceptance by OWNER of CONTRACTOR's bid.

C. That OWNER shall pay to CONTRACTOR for performance of the Work embraced in this Contract, in accordance with the Contract Documents, and CONTRACTOR shall accept as full compensation therefor, the sum (subject to adjustment as provided in the Contract Documents) of _____Dollars and __ Cents ($_____)

for all Work covered by and included in the Contract award and designated in the foregoing Article I; payment thereof to be made in current funds in the manner provided in the Contract Documents.

D. Notwithstanding anything to the contrary in the foregoing, CONTRACTOR acknowledges and agrees that, pursuant to the applicable Laws and Regulations, this Agreement is subject to an annual appropriation dependency requirement to the effect that the renewal and/or continuation of this Agreement is contingent upon the appropriation of funds to fulfill the requirements of the Agreement. If the OWNER fails to appropriate sufficient monies to provide for payments under this Agreement, the Agreement shall terminate on the last day of the last fiscal year for which funds were appropriated. This ground for termination is in addition to any other grounds that are identified in the General Conditions or the Supplementary Conditions.

E. As provided in Paragraph 13.03.B of the General Conditions, estimated quantities are not guaranteed, and determinations of actual quantities and classification are to be made by ENGINEER as provided in Paragraph 10.05 of the General Conditions. Unit prices have been computed as provided in Paragraph 13.03.D of the General Conditions.

SECTION 2. OWNER'S REPRESENTATIVE

A. The Project has been designed by ____*insert engineer*_____, who is hereinafter called "ENGINEER" and who is to act as OWNER's representative, to assume all duties and responsibilities and to have the rights and authority assigned to ENGINEER in the Contract Documents in connection with completion of the Work in accordance with the Contract Documents.

B. All notices, letters, and other communications directed to OWNER shall be delivered, mailed (with proper postage), or emailed to the ENGINEER at the address in the Invitation to Bid, with a copy sent to:

_*insert Director of Department*_____

Jefferson Parish Department of _*insert name of Department*__

_*insert address*_____

Jefferson, Louisiana _*insert zip code*_

C. In addition, a copy of all correspondence directed to the ENGINEER shall be sent to the OWNER. The business address of CONTRACTOR given in this Agreement and CONTRACTOR's office in the vicinity of the Work are both hereby designated as the places to which all notices, letters, and other communications to CONTRACTOR will be mailed, emailed, or delivered. CONTRACTOR shall notify ENGINEER and OWNER of any change of address immediately.

SECTION 3. CONTRACT TERM

The Work will be substantially completed within _____ days after the date when the Contract Times commence to run as provided in Paragraph 4.01 of the General Conditions ("Substantial Completion"), and completed and ready for final acceptance in accordance with Paragraph 15.06.B. of the General Conditions within _____ days after the date when the Contract Times commence to run. This time allocation allows for _____ days of lost production due to inclement weather. The contract time shall commence on the date listed on the CONTRACTOR'S Notice To Proceed issued by OWNER.

SECTION 4. BONDS

A. LABOR AND MATERIALS PAYMENT BOND

CONTRACTOR hereby firmly and truly binds itself as principal with _____, as surety, unto the OWNER in the full and true sum of $_____ for the payment whereof Contractor and Surety bind themselves, their heirs, executors, administrators, successors and assigns, jointly and severally, firmly by these presents, according to the terms and conditions of the labor and material payment bond(s).

B. PERFORMANCE BOND

CONTRACTOR hereby firmly and truly binds itself as principal with _____, as surety, unto the OWNER in the full and true sum of $_____ for the payment whereof Contractor and Surety bind themselves, their heirs, executors, administrators, successors and assigns, jointly and severally, firmly by these presents, according to the terms and conditions of the performance payment bond(s).

SECTION 5. LIQUIDATED DAMAGES

A. OWNER and CONTRACTOR recognize and agree that time is of the essence of this Agreement and that the Work must be completed in every respect appropriate within the applicable time limits set forth in the Contract Documents, commencing from the date specified in the Contract Documents. OWNER and CONTRACTOR further understand and agree that it is difficult at this time to estimate the damage which the delay in completion of the Work would cause the OWNER and that, accordingly, if the CONTRACTOR shall neglect, fail, or refuse to complete the Work in accordance with the Contract Times specified in the Contract Documents, or any extension thereof granted by the OWNER in accordance with the applicable provisions of the Contract Documents then, in addition to the other stipulated damages provided for in Article VII below, the CONTRACTOR agrees, as a part of the consideration for the award of this Contact, that OWNER shall be entitled to receive the amount or amounts per day set forth in paragraph B below from CONTRACTOR, not as a penalty but as stipulated

("liquidated") damages for delay for such breach of contract, such amounts being specifically herein agreed upon in advance as the measure of damages to the OWNER on account of such delay in the completion of the Work.

B. The CONTRACTOR shall owe OWNER liquidated damages in the amount of **_____ dollars ($_____.00)** for each and every calendar day after the time specified in Article V for Substantial Completion of the Work until the Work is determined to be substantially complete in accordance with the Contract Documents. After Substantial Completion, if the CONTRACTOR shall neglect, fail, or refuse to complete the Work within the time specified in Article V for final completion, or any proper extension thereof granted by the OWNER, CONTRACTOR shall owe OWNER liquidated damages in the amount of **_____ dollars** (**$_____.00**) for each day after the time specified in Article V for final completion until the Work is determined to be finally completed in every respect in accordance with the Contract Documents.

C. The number of calendar days in default shall be calculated exclusive of the day on which the applicable completion time was specified and shall include each and every other calendar day up to and including the day that the CONTRACTOR has been determined to satisfy its obligation for the applicable degree of completion under the Contract Documents.

D. CONTRACTOR further agrees that the expiration of the Contract Time shall, ipso facto, constitute a putting in default where CONTRACTOR has failed to complete the Work in accordance with the applicable Contract Times, and OWNER need not formally place the CONTRACTOR in default, the CONTRACTOR hereby expressly waiving any and all notices of default.

E. CONTRACTOR agrees and consents that the liquidated damages may be deducted from progress payments payable to CONTRACTOR pursuant to the Contract Documents and that CONTRACTOR shall accept the Contract Price, reduced by the aggregate amount of the liquidated damages so deducted, in full satisfaction of all Work executed under the Contract Documents.

F. In addition to, and not in lieu of the liquidated damages provided above, OWNER shall also be entitled to recover from CONTRACTOR or CONTRACTOR's Surety additional liquidated damages arising out of the breach of contract for delay in completion of the Work in accordance with the Contract Times for the same amount of time calculated pursuant to ARTICLE VI above. These additional liquidated damages, the amounts of each of which are applicable to the Contract having been set forth in the Supplementary Conditions, may include, but are not limited to:

(1) Extended architectural and/or engineering fees: $____ /hour;

(2) Extended Resident Project Representative fees: $____ /hour;

(3) Extended construction management fees: $____ /day;

(4) Extended OWNER'S overhead and personnel expenses: $____ /hour; and

(5) Owner's other costs directly related to the delay in completion beyond the Contract Times.

CONTRACTOR agrees and consents that the additional liquidated damages may be deducted from progress payments payable to CONTRACTOR pursuant to the Contract Documents and that CONTRACTOR shall accept the Contract Price, reduced by the aggregate amount of the additional liquidated damages so deducted, in full satisfaction of all Work executed under the Contract Documents.

SECTION 6. PAYMENTS

CONTRACTOR shall submit Applications for Payment in accordance with Article 15 of the General Conditions. Applications for Payment will be processed by ENGINEER as provided in the General Conditions.

OWNER shall make progress payments on account of the Contract Price on the basis of CONTRACTOR's Applications for Payment as recommended by ENGINEER, as provided below. All such payments will be measured by the schedule of values established pursuant to Paragraph 2.05 of the General Conditions (and in the case of Unit Price Work based on the number of units completed) or, in the event there is no schedule of values, as provided in the General Requirements.

Upon receipt of the Final Application for Payment, OWNER shall pay the remainder of the Contract Price as recommended by ENGINEER as provided in Paragraph 15.06.E.3. of the General Conditions and any relevant Supplementary Conditions.

Pursuant to LSA-R.S. 38:2248, OWNER shall retain the following percentages of each progress payment until payment is due under the terms and conditions governing retainage payment:

CONTRACT AMOUNT	RETAINAGE
$0 - $499,999.99	10%
$500,000 or greater	5%

SECTION 7. CONTRACT DOCUMENTS

The Contract Documents, which comprise the agreement between OWNER and CONTRACTOR, concerning the Work, consist of the documents listed in the Table of Contents, if any, and the documents identified below:

1. General Conditions (pages 1 to 82 of 104, inclusive).
2. Supplementary Conditions (pages 83 to 91 of 104, inclusive).
3. Exhibits to this Agreement (pages 92 to 95 of 104, inclusive).
4. Form of Agreement (pages 96 to 104 of 104, inclusive).
5. Performance, Payment, and other Bonds, consisting of ___ pages.
6. Notice to Proceed. (Not attached)
7. Specifications bearing the title _____*insert title of project*_____ and consisting of _____ pages.
8. Drawings consisting of a cover sheet and sheets numbered _____ through _____, inclusive with each sheet bearing the following general title: _____*insert title of project*_____ _____.
9. Addenda numbers ___ to ___, inclusive.
10. CONTRACTOR's Bid (pages _____ to _____, inclusive).
11. Documentation submitted by CONTRACTOR prior to Notice of Award: (pages ____ to ____, inclusive).
12. The following which may be delivered or issued after the Effective Date of the Agreement and are not attached hereto: All Written Amendments and other documents amending, modifying or supplementing the Contract Documents pursuant to Article 11 of the General Conditions.

The documents listed above are attached to this Agreement (except as expressly noted otherwise above).

SECTION 8. CONTRACTOR'S REPRESENTATIONS

In order to induce OWNER to enter into this Agreement, the CONTRACTOR makes the following representations:

A. CONTRACTOR has visited the Site, has familiarized himself with and is satisfied as to the nature and extent of the Contract Documents, Work, locality, and as to all general, local and Site conditions and federal, state, and local Laws, and Regulations, which may affect cost, progress, performance or furnishing of the Work.

B. CONTRACTOR has examined and carefully studied the Contract Documents and the other related data identified in the Bidding Documents including Technical Data.

C. CONTRACTOR has carefully studied all (1) reports of explorations and tests of subsurface conditions at or contiguous to the Site and all drawings of physical conditions in or relating to existing surface or subsurface structures at or contiguous to the Site (except Underground Facilities) which have been identified in the Supplementary Conditions as provided in Paragraph 5.03.A. of the General Conditions and (2) reports and drawings of a Hazardous Environmental Condition, if any, at the Site which has been identified in the Supplementary Conditions as provided in Paragraph 5.03.A of the General Conditions. CONTRACTOR accepts the determination set forth in Paragraph SC-5.03 of the Supplementary Conditions of the extent of the Technical Data contained in such reports and drawings upon which CONTRACTOR is entitled to rely as provided in Paragraph 5.03 of the General Conditions. CONTRACTOR acknowledges that such reports and drawings are not Contract Documents and may not be complete for CONTRACTOR's purpose. CONTRACTOR acknowledges that OWNER and ENGINEER do not assume responsibility for the accuracy or completeness of information and data shown or indicated in the Contract Documents with respect to Underground Facilities at or contiguous to the Site. CONTRACTOR has obtained and carefully studied (or assumes responsibility for having done so) all such additional supplementary examinations, investigations, explorations, test, studies and data concerning conditions (surface, subsurface and Underground Facilities) at or contiguous to the Site or otherwise which may affect cost, progress, performance or furnishing of the Work or which relate to any aspect of the means, methods, techniques, sequences and procedures of construction to be employed by CONTRACTOR and safety precautions and programs incident thereto. CONTRACTOR does not consider that any additional examinations, investigations, explorations, tests, studies or data are necessary for the performance and furnishing of the Work at the Contract Price, within the Contract Times and in accordance with the other terms and conditions of the Contract Documents.

D. CONTRACTOR is aware of the general nature of work to be performed by OWNER and others at the Site that relates to the Work as indicated in the Contract Documents.

E. CONTRACTOR has correlated the information known to CONTRACTOR, information and observations obtained from visits to the Site, reports and drawings identified in the Contract Documents and all additional examinations, investigations, explorations, tests, studies and data with the Contract Documents.

F. CONTRACTOR has given ENGINEER written notice of all conflicts, errors, ambiguities or discrepancies that CONTRACTOR has discovered in the Contract Documents and the written resolution thereof by ENGINEER is acceptable to CONTRACTOR, and the Contract Documents are generally sufficient to indicate and convey an understanding of all terms and conditions for performance and furnishing of the Work.

SECTION 9. ASSIGNMENT

Neither the OWNER nor the CONTRACTOR shall assign, sell, transfer or otherwise convey any interest in this Agreement, including any monies due or to become due to the CONTRACTOR under the contract,

without the prior written consent of the other, nor without the consent of the surety, unless the surety has waived its right to notice of assignment. Unless specifically stated to the contrary in any written consent, no assignment, sale, transfer, or conveyance will act as a release or discharge of a party from any duty or responsibility under this Agreement or the General Conditions.

SECTION 10. INSPECTOR GENERAL

It shall be the duty of every parish officer, employee, department, agency, special district, board, and commission; and the duty of every contractor, subcontractor, and licensee of the parish, and the duty of every applicant for certification of eligibility for a parish contract or program, to cooperate with the inspector general in any investigation, audit, inspection, performance review, or hearing pursuant to JPCO 2-155.10(19).

By signing this document, every corporation, partnership, or person contracting with PARISH, whether by cooperative endeavor, intergovernmental agreement, bid, proposal, application or solicitation for a parish contract, and every application for certification of eligibility for a parish contract or program, attests that it understands and will abide by all provisions of JPCO 2-155.10.

SECTION 11. SEVERABILITY CLAUSE

Any provision or part of the Contract Documents held to be void or unenforceable under any Law or Regulation shall be deemed stricken, and all remaining provisions shall continue to be valid and binding upon OWNER and CONTRACTOR, who agree that the Contract Documents shall be reformed to replace such stricken provision or part thereof with a valid and enforceable provision that comes as close as possible to expressing the intention of the stricken provision.

SECTION 12. ENTIRE AGREEMENT

This Agreement shall be deemed to be a contract made under the laws of the State of Louisiana, and for all purposes shall be interpreted in its entirety in accordance with the laws of said State. The contractor hereby agrees and consents to the jurisdiction of the courts of the State of Louisiana over its person. The parties hereto agree that the sole and exclusive venue of any suit or proceeding brought pursuant to this contract shall be the 24th Judicial District Court for the Parish of Jefferson, State of Louisiana.

This Agreement and the attached documents represent the entire agreement between the OWNER and CONTRACTOR and supersede all prior negotiations, representations or agreements, either written or oral. This Agreement may be amended only by a written instrument signed by both the OWNER, through its Council Chairperson, and the CONTRACTOR.

This Agreement is fully executed on the latest date indicated below.

PARISH OF JEFFERSON

_____ By: _____

Date _____, Chairman
Jefferson Parish Council

INSERT CONTRACTOR'S NAME

_____ By: _____

Date insert representative name
insert title

License No. _____

Address for giving notices: _____

_____

SPECIAL PROVISIONS
(Revised 3-30-2022)

SP.01 STANDARD SPECIFICATIONS

All work performed under this Contract shall conform with the Louisiana Standard Specifications for Roads and Bridges, 2016 Edition, and latest revisions, except as modified in the Technical Specifications and the EJCDC C-700, STANDARD GENERAL CONDTIONS OF THE CONSTRUCTION CONTRACT.

SP.02 LABOR PREFERENCE

To the extent that qualified mechanics and laborers are available, employment preference shall be given bona fide residents of Jefferson Parish.

SP.03 PREVAILING WAGES

The payment of Prevailing Wage Rates is not a requirement of this project.

SP.04 TESTING LABORATORY

A) Should the Owner so decide, an independent testing laboratory shall be employed and paid by the Owner for the purpose of conducting test of materials.
B) Owner shall pay for initial tests only. The Contractor shall bear the cost for any retest required due to any test failure.
C) The selection of the testing laboratory by the Owner shall be understood as in no way relieving the Contractor of his responsibility for requirements of the Contract. Excluding written protest by the Contractor in advance of processing or use of materials, services of the testing laboratory shall be understood as constituting full acceptance and approval of the Contractor.
D) The Contractor shall cooperate with and make available to the testing laboratory such facilities and material samples as may be necessary for the performance of testing services. (No Direct Pay)

SP.05 COMMUNICATIONS

All notices, demands, request, instructions, approval, proposals, and claims must be in writing.

Any notice to or demand upon the Contractor shall be sufficiently given if delivered at the office of the Contractor stated on the Signature page of the agreement (or at such other office as the Contractor may from time to time designate in writing to the Owner) or if deposited in the United States mail in a sealed, postage-prepaid envelope, or delivered with charges prepaid to any telegraph company for transmission, in each case addressed to such office.

All papers required to be delivered to the Owner shall, unless otherwise specified in writing to the Contractor, be delivered to Jefferson Parish, Department of Engineering, 1221 Elmwood Park Boulevard, Suite 802, Jefferson, Louisiana, 70123, and any notice to or demand upon the Owner shall be sufficiently given if so delivered, or if deposited in the United States mail in a sealed, postage-prepaid envelope, or delivered with charges

prepaid to any telegraph company for transmission to said Parish at such address, or to such other address as the Owner may subsequently specify in writing to the contractor for such purpose.

Any such notice shall be deemed to have been given as of the time of actual delivery or (in case of mailing when the same should have been received in due course of post; or in the case of telegrams, at the time of actual receipt, as the case may be).

The Engineer shall be copied on all correspondence.

SP.06 CONSTRUCTION NOISE

The Contractor shall maintain and operate equipment in such manner as to minimize noise generation to the extent practicable. All engines used on the project shall be equipped with properly functioning mufflers.

SP.07 ALIGNMENT, BENCH MARKS, AND CONSTRUCTION LAYOUT

The Contractor will be responsible for establishing all lines and grades and staking out all work on this project. The Engineer will furnish baseline reference points and benchmarks for use by the Contractor to establish horizontal and vertical controls.

The Contractor shall employ sufficient qualified engineering personnel experienced in layout and construction of highways and bridges to correctly establish and keep complete and comprehensive notebook records of all lines and grades necessary form initial layout to final acceptance. The Contractor will be liable for the accuracy of the initial layout and all subsequent alignment and elevations and shall, at his own expense, rebuild, repair or make good any portion of the work found to be incorrectly positioned either horizontally or vertically at any time before final acceptance. The Contractor shall notify the Engineer immediately of any apparent error in the plans.

The Contractor shall number notebooks for complete and comprehensive recording of all lines and grades. These notebooks shall be provided to the Engineer and shall be properly indexed and cross-referenced by the Contractor for as-built data. The Contractor will responsible for providing a marked-up set of prints showing as-built conditions.

The Engineer may, at his option, make either spot or complete checks of all construction alignment and grades to determine the correctness of the Contractor's work. However, these checks by the Engineer will not relieve the Contractor of his responsibility for constructing the work in the positions and to the elevations shown on the plans or approved revisions thereto. All measurements for determination of pay quantities will be plan dimension unless amended by field instruction.

SP.08 TRAFFIC MAINTENANCE, CONSTRUCTION SIGNING, TEMPORARY SIGNS AND BARRICADES, AND PUBLIC SAFETY

The Contractor shall be responsible for providing safe and expeditious movement of traffic through construction zones. A construction zone is defined as the immediate areas of actual construction and all abutting areas which are used by the Contractor and which interfere with the driving or walking public. The Contractor shall be responsible for installation and maintenance of all devices and requirements in accordance with the

construction signing details for the duration of the construction period. Cuts in roadway lanes which must be left open overnight shall be backfilled with crushed stone to carry vehicular traffic at NO DIRECT PAYMENT.

The Contractor shall check twice daily (noting in the daily logs), once in the morning and at the close of work in the evening, daily on weekends and holidays, that all signs, barricades, channelizing devices, striping, lights, etc. are in place and functioning. Video of all sign and barricade changes for each phase of construction is required, noting time and date on the video copy. A representative of the Engineer shall be present for videoing.

The Contractor shall be responsible for removal, relocation, or replacement of any traffic control device in the construction area which exists as part of the normal pre-construction traffic control scheme. Any such actions shall be performed by the Contractor under the supervision, and in accordance with the Specifications, of the Jefferson Parish Department of Public Works Traffic Engineering Division, unless otherwise specified. Also, the Contractor should consult with the Traffic Engineering Division immediately on any vehicular or pedestrian safety or efficiency problem incurred as a result of construction of the project.

The Contractor shall provide daily reports to the Engineer at the end of each working day, stating that all signs and barricades necessary for construction are in place and operable.

SP.09 ACCESS TO DRIVEWAYS

During the construction of the project, the Contractor shall provide temporary access to commercial and residential driveways.

SP.10 CONSTRUCTION NOTIFICATIONS

The Contractor shall contact the Police Department, Fire Department, School Board, U. S. Postal Service, Area Hospitals, Trash Collection Companies, Private Utility Companies and the Department of Engineering **at least** 48 hours before commencing work and closing of any street. The Contractor shall request final approval of any street closing from the Jefferson Parish Department of Engineering and Traffic Engineering Division at least (14) **fourteen days in advance**.

SP.11 CLEANING UP

The Contractor **shall at all times** keep all roadways being used by him or his sub-contractors free from accumulation of waste materials and other debris caused by his construction operation. Waste shall not be buried or burned on the site or disposed of in the storm drains, sanitary sewers, or canals. All waste shall be removed from the site and disposed of in a manner that complies with local ordinances and anti-pollution laws. There will be no direct payment for this operation.

SP.12 UNDERGROUND AND OVERHEAD UTILITIES

Locations of existing underground and overhead utilities shown on plans are approximate. Prior to any type of excavation, Contractor shall contact all utility companies (private and public) for the purpose of establishing exact location of utilities in the field. Contractor shall perform any necessary exploratory work ahead of the construction operation as

directed by the project engineer for public utilities. This exploratory work is for the purpose of establishing exact location of underground utilities and determining whether a conflict will exist with the proposed work. FOR THIS PROJECT, PRIOR TO THE CONSTRUCTION, CONTRACTOR **MUST** CONTACT JEFFERSON PARISH TRAFFIC ENGINEERING, TO LOCATE ALL EXISTING UNDERGROUND TRAFFIC INFRASTUCTURES.

The Contractor's attention is called to the presence of overhead and underground power lines, underground gas, and communication lines throughout the project. The Contractor is solely responsible for project safety and coordinating his operations with all utility companies.

SP.13 PRIVATE UTILITY RELOCATION

Private utilities located on public right-of-way which are required to be relocated or de-energized at the job site or removed entirely from the job site to accommodate the project will be done so at no cost to the Contractor. Any such relocation/removal has to be necessary for the construction of the project and as described in the plans or specifications. If, during construction, the Contractor determines that additional relocations/removals are necessary to perform the work, then the approval of the engineers and the owner will be required. If the engineers and the Owner agree with the additional relocations/removals, then it will also be accomplished at no expense to the contractor.

SP.14 CONSTRUCTION IN VICINITY OF ENTERGY TRANSMISSION AND DISTRIBUTION LINES

While constructing the project, the Contractor may be working near, and under Entergy overhead and underground power lines. Prior to beginning construction, the Contractor shall contact Entergy to coordinate all construction work; and establish necessary safety precautions. All construction work near power lines shall be performed in accordance with OSHA, NEC and Entergy requirements.

The Contractor shall maintain a safe distance from all energized power lines in accordance with OSHA, NEC and Entergy requirements. Contractor shall be responsible for determining the maximum height and reach attainable by any part of any piece of his equipment, and after coordinating with Entergy to determine the height and location of the power line, shall determine the safe clearance which shall not be violated. If the safe clearance will be violated, no work shall be performed until the Contractor coordinates with Entergy to de-energize all necessary lines. The Contractor shall not work under or around the line unless the line is de-energized. If the line is to be de-energized, but is to remain in-place, rather than being removed, the Contractor shall establish a coordination procedure with Entergy to ensure that the Contractor shall have sufficient notice to allow removal of all equipment (which may violate the safe clearance) from the area prior to the line being re-energized.

These procedures and requirements shall also apply to any buried power lines.

Contractor's full compliance with all procedures and requirements for overhead and underground power lines noted in this special provision shall be maintained at all times. Refer to SP.13 for method of payment regarding temporary relocations, disconnections,

or de-energization.

SP.15 COOPERATION BETWEEN CONTRACTORS

The Contractor shall be cognizant of the fact that other utility related work may be under construction at the same time that this Contract is active. There shall be complete cooperation with any other contractor in the area, and any unavoidable conflicts shall be immediately brought to the Engineer's attention.

SP.16 CONSTRUCTION IN VICINITY OF EXISTING STRUCTURES, ROADWAYS, SIDEWALKS/DRIVEWAYS, LANDSCAPING, ETC…

The Contractor shall be fully responsible for maintaining the integrity of all existing structures (fences, poles, etc…), roadways, sidewalks/driveways, landscaping, etc… within the project limits, throughout the duration of the project. Any damage to these structures/facilities resulting from the Contractor's operation shall be repaired or replaced at Contractor's expense. All repairs and replacements shall be made to the satisfaction of the Engineer and Owner. There shall be "No Direct Pay" for any work or materials required to maintain the integrity of these structures/facilities.

SP.17 DISPOSAL OF CONCRETE, ASPHALT AND UNCLASSIFIED EXCAVATION

All concrete and asphalt pavements, walks and curbs removed from the project, as well as all unclassified excavation not otherwise used in the project, shall become the property of the Contractor, and shall be disposed of at no cost to the owner. Written permission of the property owner on whose property the material is placed shall be required. Copies of the written agreement with the property owners shall be provided to the Engineer prior to commencement of disposal.

SP.18 DRAINAGE

Contractor shall not impede existing or new drainage during rainstorms or when a storm is imminent.

SP.19 CONSTRUCTION IN EXISTING DRAINAGE CANAL

The Contractor shall be required to notify the Jefferson Parish Department of Public Works (Drainage Department) by letter, of the construction sequence he will utilize for construction of culverts in canals.

If the Contractor plans to construct temporary dams in the canal to facilitate bridge or culvert construction, he shall point out in his letter the exact location and desirable elevation of each of the dams for prior approval.

The Contractor shall be responsible for removal of these dams, on short notice in the event the Jefferson Parish Department of Public Works or the Engineer requests their removal to facilitate the movement of water in canal.

Temporary dams constructed of wood or steel sheeting will not be allowed. See Technical Specifications Section (N/A) for additional requirements.

The Contractor will be required to design, install and maintain a system to by-pass dry weather flows past/around dewatered areas within the drainage canal. All costs associated with furnishing, installing and operating the accepted dry weather flow by-pass system shall be included in Item No. (N/A) Initial Installation & Final Removal of Dams. See Technical Specifications Section (N/A) for details.

The Contractor will be responsible for maintaining flow in all sections of flume and/or box culvert throughout the life of the project. Upon completion of all flume and box culvert construction required by the plans and specifications, all flumes and box culverts shall be cleaned of soil, debris and other materials to their invert by approved methods at No Direct Payment. Removed soil, debris and other materials shall be disposed of in accordance with Subsection 202.02 of the Louisiana Standard Specifications for Roads and Bridges, 2016 Edition, or as otherwise approved in writing by the Owner at No Direct Payment. After completion of the cleaning operation, the flumes and box culverts will be inspected for acceptance. There shall be no partial acceptance of flumes or box culverts.

Excavated materials shall not be stockpiled on the canal bank unless approved in advance by Jefferson Parish Department of Drainage.

SP.20 EXISTING SOIL CONDITIONS

Soil boring logs and a summary of the pH and resistivity tests are provided in Appendix A of the Technical Specifications. A copy of the complete Sub-soil Investigation Reports prepared for this project by N/A, Inc. is available for inspection by prospective bidders at the office of N/A.

SP.21 PILE DRIVING

The Contractor is cautioned that vibrations resulting from any pile driving operation can cause structural damage to adjacent houses and other structures. He is advised to take every precaution to monitor these vibrations and to assure that they remain within safe limits, in accordance with the requirements of the U.S. Bureau of Mines, 1980.

SP.22 GRASS CUTTING

The Contractor shall cut grass areas in the public right-of-way within project limits as per directions from the Project Engineer throughout the life of the project. To further clarify this requirement the contractor is responsible for grass cutting within his immediate work zone. The contractor is not responsible for maintenance of grass in other locations within the project limits that fall outside of his immediate work zone. In other words, areas that either have been completed or areas in which the contractor has not begun work in he will not be required to cut the grass. There shall be “No Direct Payment” for this work.

SP.23 HAUL TICKETS

The Contractor shall provide multi-copy (4 minimum, different color) haul tickets to be used on this project for vehicular measure type items. The tickets shall be preprinted with the Contractor’s name and address and the project title and number. The tickets shall be consecutive numbered and have spaces providing for the following items: type of material, parcel locations, truck number, truck driver’s name, date, inspector’s signature, volume of load and any other information pertinent to the completion of the work in question.

SP.24 PARTIAL USE OF SITE IMPROVEMENTS

The Owner, at his discretion, may give notice to the Contractor that certain sections of the improvements which have been completed, inspected, and can be accepted as complying with the Technical Specifications will be placed in use, provided that the following conditions are met:

1. In the Owner's opinion, each section is reasonably safe, fit and convenient for use provided.
2. The use of such sections of the improvements shall in no way impede the completion of the remainder of the work by the Contractor.
3. The Contractor shall not be responsible for any damages or maintenance costs due directly to the use of such sections.
4. The use of such shall in no way relieve the Contractor of his liability due to having used defective materials or to poor workmanship.
5. The period of guarantee stipulated in the General Specifications and Conditions hereof, shall not begin to run until the date of the final acceptance of all work which the Contractor is required to construct under this Contract.

SP.25 MEASUREMENT AND PAYMENT

Measurement and payment shall be as specified on plans and specifications. No direct payment will be made for any item of work normally required for the type of construction involved that is not a pay item on the Proposal Form. All measurements for payment shall be made by the Project Engineer, or his authorized representative.

SP.26 PAYMENTS TO CONTRACTORS

All payment requests on invoices must be sent first to the assigned Construction Engineer for review and comment on **proper Parish forms;** which are then forwarded to the appropriate Parish Department or Program Manager (if applicable) for further handling. Contractors who fail to follow this procedure will not be paid on a timely basis due to the unnecessary delays in rerouting of the payment requests.

SP.27 UTILITY DISRUPTION

If the Contractor or any of his sub-contractors plan to disrupt utility service (i.e. sewer, water, electricity, gas, telephone, etc.), to perform any portion of his work, the Contractor shall adhere to the following requirements:

a) All businesses and residences affected by the disruption of the utility must be given written notice a minimum of forty-eight (48) hours in advance. In addition, the Contractor shall make no less than three (3) attempts to personally contact an individual at each affected business or residence. The first attempt may be while delivering the written notification, and the last attempt should be the evening prior to the disruption. The notice of disruption shall also be sent to the District Councilman and the Director of Jefferson Parish Department of Engineering.

b) The Contractor shall not disconnect the utility until after 8:00 a.m. on the morning that the work is to be performed.

c) The Contractor shall contact each business to determine if special arrangements (such as temporary water supply, port-o-lets, etc.) are necessary during the period of the utility disruption. The Contractor shall not disrupt service until all special arrangements are in place or the Contractor has received approval by the Parish to proceed.

d) All service must be restored at the end of each day, unless previously approved by the Parish.

e) Disruptions to public utility services will not be allowed over a weekend or on any holiday.

f) There shall be “No Direct Payment” for any necessary work or materials needed to perform these requirements.

SP.28 INSURER’S CLAIMS PROCEDURES

Amend 6.03 E of the EJCDC C-700, STANDARD GENERAL CONDTIONS OF THE CONSTRUCTION CONTRACT by adding the following new subparagraph after paragraph E.5:

6. The insurers shall respond to all loss notices received from the Contractor or directly within 48 hours of receipt; shall use their best efforts to make a final adjustment of the loss notices within 90 days of receipt; and shall process such loss notices promptly and expeditiously.

SP.29 COPIES OF DRAWINGS FURNISHED

Article 2.02 of the EJCDC C-700, STANDARD GENERAL CONDTIONS OF THE CONSTRUCTION CONTRACT is amended as follows: "The Engineer will furnish to the Contractor free of charge, not to exceed six (6) copies of Engineering Drawings and Specifications". With this exception the paragraph shall remain unchanged.

SP.30 DISPOSAL OF MATERIAL CLASSIFIED AS DRAINAGE EXCAVATION

All drainage excavation materials shall be disposed of and graded off-site by the contractor at an approved site designated by the Owner. Materials to be excavated may be contaminated with hydrocarbons. The materials shall be transported and disposed of at the designated site within a twenty-five (25) mile radius of the project as specified by the engineer. Refer to Technical Specifications Section N/A Excavation and Embankment for additional requirements. This material can be used to blanket side slopes within canal. All cost associated with the disposal and grading of this material shall be borne by the contractor. No separate payment will be made for disposal and grading of drainage excavation material.

The contractor shall at all times keep roadway used by him for haul, free from accumulation of waste materials, dirt, and other debris caused by his construction operation.

The Contractor shall provide a dozer and operator at the designated site to spread excavated material which will be paid for by the hour of actual operation as detailed in

Technical Specifications Section N/A - Excavation and Embankment.

SP.31 DAILY REPORT

The Contractor **shall** provide daily reports at the end of the working day to the Construction Engineer stating that all signs and barricades necessary for construction are in place and operable.

SP.32 VIBRATIONS DUE TO CONSTRUCTION ACTIVITIES

The Owner will retain the services of an independent testing laboratory to perform vibration monitoring for the duration of the construction. Payment for these services will be the responsibility of the Owner.

The project engineer shall determine the need for vibration monitoring. The project engineer shall direct the number and placement of monitors to be used for each activity or condition. Monitoring equipment shall directly measure particle velocity (rate of ground movement) in three mutually perpendicular directions (longitudinal, transverse and vertical) and be capable of recording the vector sum of these three measurements to an accuracy of 0.01 in/sec. In addition, the monitoring equipment shall be capable of producing a continuous written record of all measurements taken. A daily report will be furnished to the Engineer including, at a minimum, a monitoring location plan, all recorded data and a narrative of construction activities which is referenced to the recorded data.

The Contractor shall report to the Engineer's field representative at least twenty-four (24) hours in advance of starting any new construction related activity (or if site conditions change) and request that proper vibration monitoring be provided for this activity and/or condition.

If at any time any monitor in any direction records a reading of 0.20 inches per second, the laboratory technician shall notify the Contractor and the Owner's field representative immediately. The Contractor shall record the activity and location causing the reading.

If at any time any monitor in any direction records a reading of 0.50 inches per second or greater, the laboratory technician shall notify the Contractor and the Owner's field representative immediately and the affecting construction activity shall be suspended. The Contractor shall propose to the Engineer corrective measures for the affecting construction activity to ensure that vibration-monitoring limits will not be exceeded. Upon approval by the Engineer, the modified construction activity may resume. Repair of any damage caused by the vibrations above safe limits as specified herein shall be the full responsibility of the Contractor.

SP.33 EXISTING POWER POLES

Where excavation is required adjacent to existing power poles or other structures, the Contractor has the responsibility to maintain the integrity of the structure by bracing or other means subject to the approval of the project Engineer and the utility owner (no direct payment).

SP.34 SITE SURVEY

Prior to mobilization onto the jobsite, the Contractor shall conduct a detailed survey that shall include pre-construction photographs and video of the jobsite, surrounding areas, and access and/or haul routes. This work shall be performed by a qualified, licensed company hired and paid for by the Contractor. The Contractor shall submit the name and qualifications of this company to the Owner's project engineer for review and approval prior to commencing any survey/photographic work. The Owner's project engineer shall view the video and preconstruction photographs prior to any mobilization. No work shall commence until the Owner's project engineer has recommended acceptance of the survey. This survey is intended to document existing conditions prior to construction.

Prior to beginning the work, and upon completion of the work, a series of photographs shall be made to show the existing and improved conditions.

Monthly video recording shall be taken traveling both directions through all construction zones (work areas). Videos shall be organized, titled and submitted as per this special provision.

In addition, during the progress of work, photos shall be taken every month consisting of various features, as directed by the Owner's project engineer.

Photographs shall be taken with a digital format camera which is capable of imprinting in the lower right-hand corner of the image the date of the photograph. A master list index, neatly bound, shall be furnished with the photograph files, and shall contain at a minimum, the date and time of each photograph, the station location of each photograph, the direction of view, and the image number. Progress photographs shall be furnished in digital format, as JPEG images on CD ROM media. Two (2) CD ROM's shall be furnished with each set of photographs.

Prior to mobilization and again upon the completion of the work, the Contractor shall videotape all areas of any canal, streets structures within one-hundred fifty (150) feet of the work location, and shall include the street proper, sidewalk and grass areas, driveways and the fronts of the residences. Views shall also clearly show any existing damage prior to the commencement of work.

The Contractor shall provide a monthly videotape of the construction and traffic signage. Monthly videotape shall show a walk-through of the project area, showing all construction and traffic signage. One digital copy on CD of the monthly progress video as described herein shall be delivered.

Specifically, roadway segments and haul routes should be digital video recorded moving near the curb with the curb in the middle of the frame. The field of view should be from the center of the pavement to at least 2 feet beyond the apparent R/W line, panning as needed to ensure details are in focus. Thus, each roadway segment and haul route will be run twice, once along each curb. The contractor should take additional video and photos as deemed necessary.

Travel speed of the camera for roadway video shall not be greater than one (1) mile per hour. The video portion of all recordings shall reproduce bright, sharp, clear pictures with accurate colors and shall be free from distortion or any other form of picture imperfection

post editing. The audio portion of all recordings shall reproduce precise and concise explanatory notes by the camera operator with proper volume, clarity and freedom from distortion.

Master video disks in DVD format shall be produced with accompanying audio on NTSC 1080p HD video equipment, in DVD format. Master field videos shall be edited onto a DVD. Videos shall be identified on screen with the date made. Videos shall be titled prior to each new video sequence and after every 30 minutes of lapse time. The title shall include the project name, video name and sequence number, location, and date made. One (1) DVD format copy of the master edit shall be delivered to the Owner's Project Engineer within two weeks of being videoed. Each video shall be furnished with an index that includes at a minimum, the project name, video name, and sequence number, location, date made, and time counter (run time in minutes) at the beginning of each video sequence on the disk.

The Owner shall have the authority to reject all or any portion of the video survey not conforming to the requirements of this provision. Those rejected portions shall be re-videoed at no additional cost to the Owner.

There shall be NO MEASUREMENT OR DIRECT PAYMENT for services required by this provision.

SP.35 TREATMENT OF BOLTS TO PREVENT REMOVAL OF NUT AND WASHER

The Contractor will be required to treat all bolts accessible from roadway or canal bank in such a way as to prevent removal of nuts and washer by vandals. Method for achieving this goal must be approved by Project Engineer. (No direct pay).

SP.36 ELECTRICAL POWER AND WATER SUPPLY

The Contractor shall make arrangements for electric power and water supply for construction and testing purposes from the respective companies serving the area and shall pay all charges therefore, including installation, service and use charges.

SP.37 FIELD OFFICE FACILITIES

The Contractor shall furnish and install one portable trailer type office at the site of the work for the exclusive use of the Engineer, the Owner or their authorized representatives. The office facility will remain the property of the Contractor and shall be removed from the site after the project is substantially constructed, erected, and properly braced to the approval of the Engineer.

The office shall be provided with an outside door lock. The area required for the Engineer/Owner exclusive use shall not be less than 150 square feet. The Contractor shall furnish and install in the trailer all necessary electrical wiring, plumbing, toilet facility, lighting, air conditioning, heating, telephone service, and answering machine within ten (10) working days from receipt of the Owner’s written Notice to Proceed.

The Contractor shall provide one 30” x 60” desk with not less than 3 drawers, one plan table, one single file cabinet, and one standard arm rest type chair for use by the Resident Project Representative. The Contractor shall supply one refrigerated bottled water

dispenser unit and bottled water and paper cup supply for the project duration.

See Technical Specifications Section N/A for additional requirements.

SP.38 SHEETING, BRACING AND FALSEWORK

Contractor shall furnish, install and remove any and all sheeting, bracing and falsework necessary for construction of specified items of work included in this project.

This provision shall include but is not necessarily limited to any and all required trench and excavation sheeting, lateral support bracing, falsework, forms, and dewatering stops together with all labor, materials and equipment necessary to insure safety of workmen and satisfactory completion of each specified item of work.

SP.39 WORK STOPPAGE DUE TO PUBLICALLY DECLARED EMERGENCY

If there is an emergency declared by the Federal, State or Local government in Jefferson Parish or in any portion thereof, then all work on this project shall cease until such time as the contractor is instructed to resume work by the Department Director (no one else) who has jurisdiction over the project.

If there is any type of work which must proceed to prevent harm to persons or property, or damage to the project itself; then contractor should immediately contact the Department Director for necessary instructions. If contractor is unable to contact the Department Director, contractor may perform the work necessary to prevent such harm in accordance with industry safety standards.

Contractor shall be entitled to an extension of time for the period of the stoppage, but shall not be entitled to any additional compensation by reason thereof.

SP.40 COOPERATION WITH UTILITIES

Subsection 105.06 of the 2016 Louisiana Standard Specifications for Roads and Bridges is amended to include the following:

Utility facilities will be removed, relocated, adjusted or abandoned in accordance with agreements between the Parish of Jefferson and utility owners listed below. Whenever practicable, utilities that are in conflict with the work shall be relocated prior to the Notice to Proceed date. In some cases, where noted in the plans and/or specifications, Contractor will be required to assist the utility by excavating the underground pipe or conduit. Starting dates for such work will be determined by the engineer and may be different for each utility. This work shall be coordinated with the Utility, and should be scheduled to be completed within the Assembly Period whenever possible (see SP.42).

In some projects, utility relocation work may have to be performed concurrently with the contractor's work. The following estimated completion times for utility work is for information purposes only and will not relieve the contractor of any requirements of this subsection nor will it preclude the granting of contract time credits in accordance with the provisions of this subsection.

UTILITY OWNER	Estimated Calendar Days for Completion
Atmos Energy Louisiana	0
Entergy Corporation	0
AT&T – East Bank	0
Cox Communications, Louisiana, LLC	0
Gulf South Pipeline Company LP	0
Southern Light Fiber	0
Hunt Telecommunications	0

SP.41 EXPLORATORY EXCAVATION

The Technical Specification for Exploratory Excavation is supplemented as follows:

Utility excavations shall be performed prior to the start of work to allow ample time for the engineer to resolve conflicts. The location and final quantity of excavations will be determined in the field by the engineer. Utility excavations shall include the removal and disposal of existing material as indicated on the plans or as directed by the engineer. Coordinate excavation with utility companies and abide by their procedures and requirements for exposing utilities. Excavate to expose the utility to determine type, size, location, and depth. Furnish the engineer with a detail of this information for all utilities exposed by the excavation. Inaccurate information provided to the engineer that causes delays or additional costs to the project shall be at the contractor's expense. The contractor shall be solely responsible for damages to existing facilities due to the exploratory excavation.

Contractor shall design and construct all temporary sheeting and bracing required to ensure stability of the excavation, and shall properly secure and mark the excavation site to maintain public safety at all times in accordance with the contract plans and specifications. The engineer shall be furnished with Contractor's installation plan for the temporary sheeting and bracing [with design assumptions and calculations] signed and sealed by a professional civil engineer licensed in Louisiana. If excavation is below the groundwater table, provide groundwater control to permit excavation so that there is no standing water and a dry working surface is provided to maintain stability of the excavation. Remove the temporary sheeting and bracing and backfill the excavation with granular material or other suitable backfill material as directed by the engineer. The excavation site shall be restored to its original conditions after completion of work. Compensation will be as provided under Exploratory Excavation.

SP.42 ASSEMBLY PERIOD

The entire contract shall be completed in all details and ready for final acceptance in

accordance with SP.44 - Contract Time within the time specified.

Prior to assessment of contract time, the contractor will be allowed 30 calendar days from the date stipulated in the Notice to Proceed to commence with portions of the contract work, including but not limited to assembly periods, preparatory work for materials fabrications such as test piles, or other activities which hinder progress in the beginning stages of construction. Prior to issuance of the Contractor's Notice-to-Proceed, and upon written request from the contractor justifying the need for additional time, the Department of Engineering *may* consider extending the Assembly Period, however, the Assembly Period shall not be extended for more than 60 calendar days. If the contractor begins regular construction operations prior to expiration of the assembly period, the assessment of contract time will commence at the time construction operations are begun.

The contractor shall be responsible for maintenance of traffic from the beginning of the assembly period. During the assembly period, the contractor will be allowed to do patching and other maintenance work necessary to maintain the roadway with no time charges when approved by the engineer.

The contractor is directed to the special provisions and the plans for any restrictions that may affect work schedules.

SP.43 PROJECT SIGNS

Project identification signs (maximum of two) will be furnished by Jefferson Parish and shall be installed and maintained by the Contractor throughout the duration of the project construction. The Contractor shall pick up the signs at the Jefferson Parish Traffic Engineering Department in Harahan (2100 Dickory Street) and deliver them to the designated area for installation. Installation and maintenance of project identification signs shall be the responsibility of the Contractor (No Direct Pay). Contractor to remove project signs upon completion of the work and return them to Traffic Engineering Department.

SP.44 CONTRACT TIME

All work shown on the Plans and in the Specifications shall be executed and functional in all details (Substantial Completion) within 120 consecutive calendar days from the date specified in the "Notice to Proceed" as the starting date for the Contract Time. The time allowed for completion of this project includes 27 days of inclement weather and any time required for final clean up of the project site. For this project, the set time for Final Acceptance is 30 consecutive calendar days after the job has been accepted by the Owner as Substantially Complete or 150 consecutive calendar days from the date specified in the "Notice to Proceed" as the starting date for the Contract Time, whichever occurs first.

SP.45 REIMBURSEMENT FOR RESIDENT INSPECTION EXCEEDING BUDGET

The cost of resident inspection services in excess of the budgeted amount for this project shall be assessed against CONTRACTOR'S progress payments as defined in Section H of the PUBLIC WORKS BID INSTRUCTIONS, all in accordance with LSA-R.S. 38:22169L)(2) (2003 Senate Bill 120).

SP.46 PRECONSTRUCTION CONFERENCE

Prior to the start of construction, the Engineer shall schedule a pre-construction conference. The Contractor shall be represented at the conference by his Project Manager, Project Superintendent and any other concerned personnel. Representatives from appropriate Departments of Jefferson Parish will be invited as well as representatives from the assigned testing laboratory and private utility companies, when necessary.

SECTION 01010 – SUMMARY OF THE WORK AND GENERAL REQUIREMENTS

PART 1 -- GENERAL

1.1 THE REQUIREMENT

A. Furnish all plant, tools, equipment, materials, supplies, and manufactured articles, labor, transportation, and services, including fuel, power, water, and essential communications, and performing all work or other operations required for the fulfillment of the Contract in strict accordance with the Contract Documents. Furnish all work, materials, and services not expressly indicated or called for in the Contract Documents which may be necessary for the complete and proper construction of the WORK in good faith as though originally so indicated, at no increase in cost to the OWNER. These actions constitute the WORK of this Contract.

B. **Instructions to the CONTRACTOR:** Throughout these Technical Specifications, Instructions to the CONTRACTOR are generally written in active voice, imperative mood. The subject of imperative sentences is understood to be "the CONTRACTOR." The ENGINEER and OWNER's responsibilities are generally written in passive voice, indicative mood. Phrases such as "as approved," "unless otherwise approved," "upon approval," "as directed," "as verified," "as ordered," and "as determined" refer to actions of the ENGINEER or OWNER unless otherwise stated, and it is understood that the directions, orders, or instructions to which they relate are within the limitations of and authorized by the Contract Documents.

1.2 WORK COVERED BY THE CONTRACT DOCUMENTS

A. The WORK of this Contract generally comprises the construction of a reinforced concrete enclosure of the area between the end of an existing reinforced concrete box culvert and the end of an existing reinforced concrete pipe arch (RCPA) within the existing drainage canal along Brown Avenue.

B. The Work of the contract is located within the Brown Avenue Canal, located in Harvey, Louisiana on the West Bank of Jefferson Parish. The WORK is located at the intersection of Brown Avenue and the West Bank Expressway.

C. Major Items of the WORK include, but are not limited to the following:

1. Excavation;

2. Demolition of existing retaining walls, fencing, concrete slab, and concrete barrier;

3. Dewatering of excavated site as necessary for installation of concrete enclosure;

4. Provision, placement, and compaction of bedding material including geotextile fabric and geogrid material;

5. Provision, placement, and jointing of reinforced concrete walls, bottom slab, and top slab to enclose the area between the two (2) above noted drainage structures;

6. Furnishing and installing removable access framing and grating in the top slab;

7. Backfilling of excavation for the enclosure;

8. Filling and grading around the enclosure for positive drainage;

9. Seeding and fertilizing of all disturbed areas;

10. Ancillary construction as detailed within Contract Documents.

1.3 CONTRACT METHOD

A. The WORK hereunder will be constructed under a single unit – price contract. Payments will be based upon items identified in Section 01025 - Measurement and Payment.

1.4 EXPLANATION OF ALTERNATES

A. No Bid Alternates will be considered.

1.5 ABBREVIATIONS OF INSTITUTIONS

A. Wherever in these Specifications references are made to the standards, specifications, or other published data of the various international, national, regional, or local organizations, such organizations may be referred to by their acronym or abbreviation only. As a guide to the user of the Specifications, the following acronyms or abbreviations which may appear have the meanings indicated herein.

B. Abbreviations:

AA	Aluminum Association
AAMA	American Architectural Manufacturers Association
AASHTO	American Association of State Highway and Transportation Officials
AATCC	American Association of Textile Chemists and Colorists
ABMA	American Bearing Manufacturer's Association – ABMA
ACGIH	American Conference of Governmental Industrial Hygienists
ACI	American Concrete Institute
AF&PA	American Forest and Paper Association
AGA	American Gas Association
AGMA	American Gear Manufacturers Association
AHA	American Hardboard Association
AHAM	Association of Home Appliance Manufacturers
AI	The Asphalt Institute
AIA	American Institute of Architects
AIHA	American Industrial Hygiene Association
AIIM	Association for Information and Image Management
AISC	American Institute of Steel Construction
AISI	American Iron and Steel Institute
AITC	American Institute of Timber Construction
AMCA	Air Movement and Control Association International, Inc
ANS	American Nuclear Society
ANSI	American National Standards Institute, Inc.
APA	The Engineered Wood Association
API	American Petroleum Institute
APWA	American Public Works Association
ARI	Air-Conditioning and Refrigeration Institute
ASA	Acoustical Society of America
ASAE	American Society of Agricultural Engineers
ASCE	American Society of Civil Engineers
ASHRAE	American Society of Heating, Refrigerating, and Air Conditioning Engineers
ASME	American Society of Mechanical Engineers
ASNT	American Society of Nondestructive Testing
ASQ	American Society for Quality

ASSE	American Society of Sanitary Engineers
ASTM	American Society for Testing and Materials
AWCI	American Wire Cloth Institute
AWI	Architectural Woodwork Institute
AWPA	American Wood Preservers Association
AWPI	American Wood Preservers Institute
AWS	American Welding Society
AWWA	American Water Works Association
BBC	Basic Building Code, Building Officials and Code Administrators International
BHMA	Builders Hardware Manufacturer's Association
CABO	Council of American Building Officials
CDA	Copper Development Association
CEMA	Conveyors Equipment Manufacturer's Association
CGA	Compressed Gas Association
CLFMI	Chain Link Fence Manufacturer's Institute
CMAA	A division/section of the Material Handling Industry of America
CRSI	Concrete Reinforcing Steel Institute
DCDMA	Diamond Core Drilling Manufacturer's Association
DHI	Door and Hardware Institute
DIPRA	Ductile Iron Pipe Research Association
EASA	Electrical Apparatus Service Association
EI	Energy Institute
EIA	Electronic Industries Alliance
EPA	Environmental Protection Agency
ETL	Electrical Test Laboratories
FCC	Federal Communications Commission
FCI	Fluid Controls Institute
FEMA	Federal Emergency Management Association
FHWA	Federal Highway Administration
FM	Factory Mutual System
FPL	Forest Products Laboratory
HI	Hydronics Institute, Hydraulic Institute
HSWA	Federal Hazardous and Solid Waste Amendments
IAPMO	International Association of Plumbing and Mechanical Officials
ICBO	International Conference of Building Officials
IBC	International Building Code
ICC	International Code Council
ICEA	Insulated Cable Engineers Association
ICCEC	Electrical Code
ICC-ES	International Code Council Evaluation Service
IEEE	Institute of Electrical and Electronics Engineers
IESNA	Illuminating Engineering Society of North America
IFC	International Fire Code
IFGC	International Fuel Gas Code
IMC	International Mechanical Code
IME	Institute of Makers of Explosives
IPC	International Plumbing Code, Association Connecting Electronic Industries
IRC	International Residential Code
ISA	Instrument Society of America
ISDI	Insulated Steel Door Institute
ISEA	Industrial Safety Equipment Association
ISO	International Organization for Standardization
ITE	Institute of Traffic Engineers

ITU-T	Telecommunications Standardization Sector of the International Telecommunications Union
LDOTD	Louisiana Department of Transportation and Development
LPI	Lightning Protection Institute
LRQA	Lloyd's Register Quality Assurance
MBMA	Metal Building Manufacturer's Association
MIL	Military Standards (DoD)
MPTA	Mechanical Power Transmission Association
MSS	Manufacturers Standardization Society
NAAMM	National Association of Architectural Metal Manufacturer's
NACE	National Association of Corrosion Engineers
DASMA	Door and Access Systems Manufacturers Association International
NAPF	National Association of Pipe Fabricators
NBBPVI	National Board of Boiler and Pressure Vessel Inspectors
NCCLS	National Committee for Clinical Laboratory Standards
NCMA	National Concrete Masonry Association
NEC	National Electrical Code
NEMA	National Electrical Manufacturer's Association
NETA	International Electrical Testing Association
NFPA	National Fire Protection Association or National Fluid Power Association
NISO	National Information Standards Organization
NIST	National Institute of Standards and Technology
NLGI	National Lubricating Grease Institute
NRCA	National Roofing CONTRACTORs Association
NSF	National Sanitation Foundation
NWWDA	National Wood Window and Door Association
OSHA	Occupational Safety and Health Administration
PCA	Portland Cement Association
PCI	Precast/Prestressed Concrete Institute
PPI	Plastic Pipe Institute
RCRA	Resource Conservation and Recovery Act
RMA	Rubber Manufacturers Association
RVIA	Recreational Vehicle Industry Association
RWMA	Resistance Welder Manufacturer's Association
SAE	Society of Automotive Engineers
SDI	Steel Door Institute, Steel Deck Institute
SMA	Screen Manufacturers Association
SMACNA	Sheet Metal and Air Conditioning CONTRACTORs National Association
SPFA	Steel Plate Fabricator's Association
SPIB	Southern Pine Inspection Bureau
SSPC	Society for Protective Coating
SSPWC	Standard Specifications for Public Works Construction
STLE	Society of Tribologists and Lubricating Engineers
TAPPI	Technical Association of the Worldwide Pulp, Paper, and Converting Industry
TFI	The Fertilizer Institute
TIA	Telecommunications Industries Association
TPI	Truss Plate Institute
UBC	Uniform Building Code
UL	Underwriters Laboratories, Inc.
WCLIB	West Coast Lumber Inspection Bureau
WDMA	National Window and Door Manufacturers Association
WEF	Water Environment Federation
WI	Woodwork Institute
WRI	Wire Reinforcement Institute, Inc.

WWPA Western Wood Products Association

1.6 REFERENCE STANDARDS

A. **Titles of Sections and Paragraphs:** Titles and subtitles accompanying specification sections and paragraphs are for convenience and reference only, and do not form a part of the Specifications.

B. **Applicable Publications:** Whenever in these Specifications references are made to published specifications, codes, standards, or other requirements, it is understood that wherever no date is specified, only the latest specifications, standards, or requirements of the respective issuing agencies which have been published as of the date that the Contract is advertised for bids apply; except to the extent that said standards or requirements may be in conflict with applicable laws, ordinances, or governing codes. No requirements set forth in the Specifications or shown on the Drawings will be waived because of any provision of, or omission from, said standards or requirements.

C. References herein to "Building Code" mean The International Building Code (IBC) latest edition. Similarly, references to "Mechanical Code", “Plumbing Code" and, “Fire Code" mean International Mechanical Code, International Plumbing Code and International Fire Code of the International Conference of the Building Officials (ICBO). "Electric Code" or "National Electric Code (NEC)" mean the National Electric Code of the National Fire Protection Association (NFPA). The latest edition of the codes as approved by the Municipal Code and used by the local agency as of the date that the WORK is advertised for bids, as adopted by the agency having jurisdiction, apply to the WORK herein, including all addenda, modifications, amendments, or other lawful changes thereto.

D. In case of conflict between codes, reference standards, drawings, and the other Contract Documents, the most stringent requirements govern. Bring all conflicts to the attention of the ENGINEER for clarification and directions prior to ordering or providing any materials or furnishing labor. Bid for the most stringent requirements.

E. References herein to "OSHA Regulations for Construction" mean **Title 29, Part 1926, Construction Safety and Health Regulations,** Code of Federal Regulations (OSHA), including all changes and amendments thereto.

F. References herein to "OSHA Standards" mean **Title 29, Part 1910, Occupational Safety and Health Standards,** Code of Federal Regulations (OSHA), including all changes and amendments thereto

G. Assume responsibility that all work included in the Contract Documents, regardless if shown or not. Comply with all EPA, OSHA, RCRA, NFPA, and any other Federal, State, and Local Regulations governing the storage and conveyance of hazardous materials, including petroleum products. Where no specific regulations exist, install chemical, hazardous, and petroleum product piping and storage in underground locations in double containment piping and tanks, or in separate concrete trenches and vaults, or with an approved lining which cannot be penetrated by the chemicals, unless waived in writing by the OWNER.

1.7 PROJECT MEETINGS

A. **Preconstruction Conference:**

1. Prior to the commencement of WORK at the Site, a preconstruction conference will be held at a mutually agreed time and place. Ensure that the conference is attended by the CONTRACTOR'S Project Manager, its superintendent, and its subcontractors as the CONTRACTOR deems appropriate. Other attendees will be:

   a. ENGINEER and the Resident Project Representative.

   b. Representatives of OWNER.

   c. Governmental representatives as appropriate.

   d. Others as requested by CONTRACTOR, OWNER, or ENGINEER.

2. The purpose of the conference is to designate responsible personnel and establish a working relationship. Matters requiring coordination will be discussed and procedures for handling such matters established. The complete agenda will be furnished to the CONTRACTOR prior to the meeting date. However, the CONTRACTOR should be prepared to discuss all of the items listed below.

   a. Status of CONTRACTOR's insurance and bonds.

   b. CONTRACTOR's tentative schedules.

   c. Transmittal, review, and distribution of CONTRACTOR's submittals.

   d. Processing applications for payment.

   e. Maintaining record documents.

   f. Critical work sequencing.

   g. Field decisions and Change Orders.

   h. Use of Site, office and storage areas, security, housekeeping, and OWNER's needs.

   i. Major equipment deliveries and priorities.

3. The ENGINEER will preside at the preconstruction conference and will arrange for keeping and distributing the minutes to all persons in attendance.

4. The CONTRACTOR and its subcontractors should plan on the conference taking no less than one half of one full working day.

B. Progress Meetings:

1. The ENGINEER will schedule and hold regular on-Site progress meetings as requested by CONTRACTOR or OWNER or as required by progress of the WORK. Ensure that the CONTRACTOR's Project Manager, superintendent, and pertinent subcontractors attend each meeting. CONTRACTOR may, at its discretion, request attendance by representatives of its suppliers, manufacturers, and other subcontractors.

2. The ENGINEER will preside at the progress meetings and will arrange for keeping and distributing the minutes. The purpose of the meetings is to review the progress of the WORK, maintain coordination of efforts, discuss changes in scheduling, and

resolve other problems which may develop. During each meeting, present any issues that may impact its progress with a view to resolve these issues expeditiously.

1.8 PERMITS

A. Abide by the conditions of all permits and obtain proof of satisfaction of conditions from issuers of permits, where so required, prior to acceptance of the WORK by the OWNER.

B. Conditions affecting the CONTRACTOR are found in the following permits. Copies of permit conditions are included as attachments to these specifications.

1. Stormwater Permit, if required, to be obtained and paid for by the CONTRACTOR;

2. Building Permit, if required, to be obtained and paid for by the CONTRACTOR.

PART 2 -- PRODUCTS (NOT USED)

PART 3 -- EXECUTION (NOT USED)

3.1 WORK BY OTHERS

A. Where 2 or more contracts are being performed at one time on the same Site or adjacent land in such manner that work under one contract may interfere with work under another, the OWNER will determine the sequence and order of the Work in either or both contracts. When the Site of one contract is the necessary or convenient means of access for performance of work under another, the OWNER may grant privilege of access or other reasonable privilege to the contractor so desiring, to the extent, amount, and in manner and at time that the OWNER may determine. No OWNER determination of method or time or sequence or order of the work or access privilege will be the basis for a claim for delay or damage except under provisions of the General Conditions for temporary suspensions of the work.

B. Conduct operations so as to cause a minimum of interference with the work of such other contractors, and cooperate fully with such contractors to allow continued safe access to their respective portions of the Site, as required to perform work under their respective contracts.

3.2 INTERFERENCE WITH WORK ON UTILITIES

A. Cooperate fully with all utility forces of the OWNER or forces of other public or private agencies engaged in the relocation, altering, or otherwise rearranging of any facilities which interfere with the progress of the WORK.

B. Schedule the WORK so as to minimize interference with said relocation, altering, or other rearranging of facilities.

3.3 CONTRACTOR'S USE OF THE SITE

A. Limit use of the site to construction operations, including on-Site storage of materials, on-Site fabrication facilities, and field offices.

3.4 WORKING HOURS

A. Limit ordinary working hours to those specified within the Special Provisions.

B. Night WORK will generally not be allowed.

C. Understand and conform to the Construction and Schedule Constraints specified within these specifications.

3.5 OWNER'S USE OF THE SITE

A. The OWNER will utilize all of the existing drainage canal for the ordinary conduct of the OWNER's drainage operations. In any event, allow the OWNER access to the Site during the entire period of construction.

3.6 BAR CHART SCHEDULING

A. Schedule the WORK in accordance with the Contract Documents.

B. Where submittals are indicated, submit as directed and as per these specifications.

C. The CONTRACTOR is alerted to the Construction and Schedule Constraints of these specifications.

D. Prepare and submit a Project Overview Bar Chart Schedule for WORK. Indicate the major components of the WORK and the sequence relations between the major components and subdivisions of major components. Indicate the relationships and time frames in which the various components of the WORK will be made substantially complete and placed into service in order to meet the Contract Times. Include sufficient detail for the identification of subdivisions of major components according to such activities as mobilization, site dewatering, excavation, demolition, yard piping installation, placement of structural backfill, final site grading, and other important WORK for each major item within the overall project scope. Indicate planned durations and start dates for each work item subdivision.

E. The ENGINEER's review and comment on the schedules will be limited to conformance to the Contract Documents. Make corrections to the schedules necessary to comply with requirements and adjust the schedules to incorporate any missing information requested by the ENGINEER.

F. Upon approval of a change order or upon receipt of authorization to proceed with additional WORK, depict the pertinent changes in the next submittal of the Project Overview Bar Chart Schedule.

G. Furnish monthly Project Overview Bar Chart Schedules and written narrative reports in the form indicated within these Technical Specifications. Submit this information along with Construction Photographs as required by these Specifications with the CONTRACTOR's Regular Progress Payment Requests.

H. Present the Project Overview Bar Chart Schedule as a summary of the current construction schedule for major project components (original and as updated and adjusted throughout the entire construction period). Represent the major project components as time bars and subdivide the major project components into various types of WORK including dewatering, excavation, demolition, yard piping, placement of structural backfill, and final site grading.

I. Plot each major component and subdivision accurately on a time scale consistent with the early start and finish activity information contained in the latest update of the schedule. In addition, list a percent completion for each major component and subdivision. Amend the Project Overview Bar Chart Schedule as necessary to include

any additional detail required by the ENGINEER. Include any additional information requested by the ENGINEER at any time during construction.

J. Prepare regular written narrative reports of the status of the project for submission to the ENGINEER with the CONTRACTOR's Progress Payment Requests. Include at a minimum the following items:

1. The status of major project components (percent complete and amount of time ahead or behind schedule) and an explanation of how the project will be brought back on schedule if delays have occurred.

2. The progress made on critical activities indicated on the construction schedule.

3. Explanations for any lack of WORK on critical activities planned to be performed during the last month.

4. Explanations for any schedule changes, including changes to the logic or to activity durations.

5. A list of the critical activities scheduled for the next 2 months.

6. The status of major material and equipment procurements.

7. The value of materials and equipment properly stored at the Site but not yet incorporated into the WORK.

8. Any delays encountered during the reporting period.

9. An assessment of inclement weather delays and impacts to the progress of the WORK.

10. Include any other information pertinent to the status of the project.

11. Include additional status information requested by the ENGINEER.

K. Include lost days on the construction schedule due to inclement weather. Inclement weather delays will be determined in accordance with the requirements of the Supplementary General Conditions.

3.7 CONSTRUCTION AND SCHEDULE CONSTRAINTS

A. Schedule, sequence, and perform the WORK in a manner which minimizes disruption to the public and to the operation and maintenance of the existing canal and adjacent roadway. See the Special Provision for additional requirements.

B. Incorporate the construction and schedule constraints of this Section and the Special Provisions in preparing the construction schedules required under these specifications.

3.8 PROTECTION OF EXISTING UTILITIES AND IMPROVEMENTS

A. Protect all existing utilities and improvements not designated for removal and restore damaged or temporarily relocated utilities and improvements to a condition equal to or better than prior to such damage or temporary relocation, all in accordance with the Contract Documents.

B. Do not undertake any WORK that would affect any oil, gas, sewer, or water pipeline; any telephone, telegraph, or electric transmission line; any fence; or any other structure, nor enter upon the rights-of-way involved until notified that the OWNER has secured authority therefor from the proper party.

C. After authority has been obtained, give said party due notice of its intention to begin work, if required by said party.

D. Remove, shore, support, or otherwise protect such pipeline, transmission line, ditch, fence, or structure, or replace the same.

E. Do not destroy, remove, or otherwise disturb any existing survey markers or other existing street or roadway markers without proper authorization. Do not begin pavement breaking or excavation until all survey or other permanent marker points that will be disturbed by the construction operations have been properly referenced. Accurately restore survey markers or points disturbed by the CONTRACTOR after street or roadway resurfacing has been completed. Use qualified licensed land surveyors for restoration of survey markers or points.

F. **Pavement:**

1. **General:** Replace all paved areas including asphaltic concrete berms cut or damaged during construction with similar materials of equal thickness to match the existing adjacent undisturbed areas, except where specific resurfacing requirements have been called for in the Contract Documents or in the requirements of the agency issuing the permit. Match existing sections for all components of existing sections, including sub-base, base, and pavement. Comply with temporary and permanent pavement requirements of the affected pavement owner. Neatly saw cut pavements which are subject to partial removal in straight lines.

2. **Temporary Resurfacing:** Wherever required by the public authorities having jurisdiction, place temporary surfacing promptly after backfilling and maintain such surfacing for the period of time fixed by said authorities before proceeding with the final restoration of improvements.

3. **Permanent Resurfacing:** In order to obtain a satisfactory junction with adjacent surfaces, t saw cut back and trim the edge so as to provide a clean, sound, vertical joint before permanent replacement of an excavated or damaged portion of pavement. Trim back damaged edges of pavement along excavations and elsewhere by full depth saw cutting in straight lines. Construct all pavement restoration and other facilities restoration to finish grades compatible with adjacent undisturbed pavement.

4. **Restoration of Sidewalks or Private Driveways:** Wherever sidewalks or private roads are removed for purposes of construction, place suitable temporary sidewalks or roadways promptly after backfilling and maintain them in satisfactory condition for the period of time fixed by the authorities having jurisdiction over the affected portions. If no such period of time is so fixed, maintain said temporary sidewalks or roadways until the final restoration thereof has been made.

G. **Underground Utilities:**

1. **General:** Protect underground Utilities and other improvements which may be impaired during construction operations, regardless of whether or not the Utilities are indicated on the Drawings. Take all possible precautions for the protection of

unforeseen Utility lines to provide for uninterrupted service and to provide such special protection as may be necessary.

2. Conduct exploratory excavations as necessary to determine the exact locations and depths of Utilities which may interfere with its work. Perform such exploratory excavations as soon as practicable after Notice to Proceed and, in any event, a sufficient time in advance of construction to avoid possible delays to the CONTRACTOR's progress. When such exploratory excavations show the Utility location as shown on the Drawings to be in error, notify the ENGINEER.

3. Perform the number of exploratory excavations which is sufficient to determine the alignment and grade of the Utility.

4. **Utilities to be Moved:** In case it becomes be necessary to move the property of any public utility or franchise holder, such utility company or franchise holder will, upon request of the CONTRACTOR, be notified by the OWNER to move such property within a specified reasonable time. When utility lines that are to be removed are encountered within the area of operations, notify the ENGINEER a sufficient time in advance for the necessary measures to be taken to prevent interruption of service.

5. **Utilities to be Removed:** Where the proper completion of the WORK requires the temporary or permanent removal and/or relocation of an existing Utility or other improvement which is indicated, remove and, without unnecessary delay, temporarily replace or relocate such Utility or improvement in a manner satisfactory to the ENGINEER and the owner of the facility. In all cases of such temporary removal or relocation, accomplish restoration to the former location in a manner that will restore or replace the Utility or improvement as nearly as possible to its former locations and to as good or better condition than found prior to removal.

6. **OWNER's Right of Access:** The right is reserved to the OWNER and to the owners of public utilities and franchises to enter at any time upon any public street, alley, right-of-way, or easement for the purpose of making changes in their property made necessary by the WORK of this Contract.

7. **Underground Utilities Indicated:** Protect existing Utility lines that are indicated or the locations of which are made known to the CONTRACTOR prior to excavation and that are to be retained, and all Utility lines that are constructed during excavation operations from damage during excavation and backfilling. If such utilities are damaged, immediately repair or replace the facility unless otherwise repaired by the owner of the damaged Utility. If the owner of the damaged facility performs its own repairs, reimburse said owner for the costs of repair.

8. **Underground Utilities Not Indicated:** In the event that the CONTRACTOR damages existing Utility lines that are not indicated or the locations of which are not made known to the CONTRACTOR prior to excavation, immediately make a verbal report of such damage to the ENGINEER and make a written report thereof promptly thereafter. The ENGINEER will immediately notify the owner of the damaged Utility. If the ENGINEER is not immediately available, notify the Utility owner of the damage. If directed by the ENGINEER, make repairs by the CONTRACTOR under the provisions for changes and extra work contained in the General Conditions.

9. Costs of locating and repairing damage not due to failure of the CONTRACTOR to exercise reasonable care, and removing or relocating such Utility facilities not indicated in the Contract Documents with reasonable accuracy, and for equipment

on the project which was actually working on that portion of the WORK which was interrupted or idled by removal or relocation of such Utility facilities, and which was necessarily idled during such work will be paid for as extra work in accordance with the General Conditions.

10. **Approval of Repairs:** All repairs to a damaged Utility or improvement are subject to inspection and approval by an authorized representative of the Utility or improvement owner before being concealed by backfill or other work.

11. **Maintaining in Service:** Unless indicated otherwise, continuously maintain in service all oil and gasoline pipelines, power, and telephone or the communication cable ducts, gas and water mains, irrigation lines, sewer lines, storm drain lines, poles, and overhead power and communication wires and cables encountered along the line of the WORK during all the operations under the Contract, unless other arrangements satisfactory to the ENGINEER are made with the owner of said pipelines, duct, main, irrigation line, sewer, storm drain, pole, or wire or cable. Assume responsibility for and repair all damage due to construction operations, and the provisions of this Section will not be abated even in the event such damage occurs after backfilling or is not discovered until after completion of the backfilling.

H. **Trees, Shrubs, Lawn Areas and Landscaping:**

1. **General:** Except where trees or shrubs are indicated to be removed, exercise all necessary precautions so as not to damage or destroy any trees or shrubs, including those lying within street rights-of-way and project limits. Do not trim or remove any trees unless such trees have been approved for trimming or removal by the jurisdictional agency or OWNER. Trim or replace existing trees and shrubs which are damaged during construction using a certified tree company under permit from the jurisdictional agency and/or the OWNER. Accomplish trimming and replacement in accordance with the following paragraphs.

2. **Trimming:** Preserve symmetry of the tree; no stubs or splits or torn branches left; make clean cuts close to the trunk or large branch. Do not use spikes for climbing live trees. Coat cuts over 1-1/2 inches in diameter with a tree paint product that is waterproof, adhesive, and elastic, and free from kerosenes, coal tar, creosote, or other material injurious to the life of the tree.

3. **Replacement:** Immediately notify the jurisdictional agency and/or the OWNER if any tree or shrub is damaged by the CONTRACTOR's operations. If, in the opinion of said agency or the OWNER, the damage is such that replacement is necessary, replace the tree or shrub at no additional cost to the OWNER. Provide and plant a tree or shrub of a like size and variety as the one damaged, or, if of a smaller size, or pay to the owner of said tree a compensatory payment acceptable to the tree or shrub owner, subject to the approval of the jurisdictional agency or OWNER. Furnish and plant a tree or shrub not less than 1-inch diameter nor less than 6 feet in height. Plant replacement trees and shrubs in accordance with the recommendations of the nursery furnishing the plants. Unless otherwise indicated, water and maintain the replacement trees and shrubs for 6 months after planting.

4. Repair or replace landscaped areas damaged during construction to match the pre-construction condition to the satisfaction of the land owner and the OWNER.

I. **Notifcation:** Prior to any excavation in the vicinity of any existing underground facilities, including all water, sewer, storm drain, gas, petroleum products, or other pipelines; all buried electric power, communications, or television cables; all traffic signal and street lighting facilities; and all roadway and state highway rights-of-way, notify the respective

authorities representing the owners or agencies responsible for such facilities not less than 3 days nor more than 7 days prior to excavation so that a representative of said owners or agencies can be present during such work if they so desire. Comply with the Louisiana Underground Utilities and Facilities Damage Prevention Law. Provide notice to Louisiana One Call (811) in accordance with the Louisiana Underground Utilities and Facilities Damage Prevention Law

3.9 ROADWAY CLOSURE REQUESTS

A. Modifications to existing facilities, the construction of new facilities, and the connection of new to existing facilities may require the temporary closure of existing roadways and driveways. In such cases, comply with the requirements set forth within the General Conditions.

3.10 PROJECT SIGN

A. Install, remove, and deliver to the OWNER project signs in accordance with the requirements of the Special Provisions.

3.11 CONSTRUCTION NOISE

A. Maintain and operate equipment in such manner as to minimize noise generation to the extent practicable. Equip all engines used on the project with properly functioning mufflers.

3.12 SITE CONDITIONS SURVEYS

A. Furnish all labor, materials, and equipment to perform color audio-video recording and photography of the project site surfaces as specified herein. Furnish to the Owner continuous color and audio-video documentation and color photographs of the project site. The Owner will reject the audio-video documentation and/or color photographs because of poor quality, unintelligible audio or uncontrolled pan or zoom. Re – video any documentation rejected at no additional cost to the Owner. Submit (1) copy to the Owner for format and content approval prior to the start of any work.

B. Prior to mobilization, conduct a detailed survey that includes preconstruction photographs and video of the jobsite, surrounding areas, and access/haul routes. Use master video format with accompanying audio on NTSC high definition video equipment with a minimum resolution of 720p (1280 x 720 progressive), supplied on a common media device (such as DVD, USB drives, external hard drives) in a common media format (such as MP4). Provide rovide video recordings made with a dedicated digital video camera specifically made for video recordings. Video recordings made with cell phones, tablets, webcams, wearable cameras, and drones are not acceptable.

C. **Qualifications:** Use audio-video taping firm or individual knowledgeable in construction practices and experienced in the implementation of established inspection procedures.

D. **Execution of Video:**

1. Video at a minimum the following areas:

a. All areas to be entered by vehicles or equipment, including construction areas for both internal and executed improvements.

b. Areas requiring manhole work.

c. Paved and unpaved areas which will be entered by vehicles or equipment.

d. Areas surrounding construction operations including exterior/ interior of homes within a 200' radius of construction.

2. Assume responsible for the timely execution of the preconstruction audio-video documentation and color photographs, its vantage points, and quality. Cooperate with the photographer's work and provide reasonable auxiliary services as requested, including access and use of temporary facilities including temporary lighting.

3. The OWNER and ENGINEER will review submitted media. Should the media not provide adequate coverage to fully illustrate the physical condition of the work area or not be in compliance with the specifications, re – survey all project areas prior to the initiation of construction at the project sites, at no additional cost to the Owner.

4. Provide a cumulative index correlating the various segments of video coverage to the corresponding media. Provide an index which clearly identifies each segment in the video by location, engineering stationing corresponding to the stationing on the contract documents, video counter number, viewing side, point starting from, traveling direction, and ending point. Written documentation must coincide with the information on the video, so as to make easy retrieval of locations sought for at a later date.

5. Provide video with bright, sharp, clear pictures with accurate colors and that is free from distortion, tearing, rolls, or any other form of picture imperfection. Provide audio portion of the recording with precise and concise explanatory notes by the camera operator with proper volume, clarity, and freedom from distortion.

6. To preclude the possibility of tampering or editing, provide video displaying continuous digital information including the following:

a. Video number;

b. Name of CONTRACTOR;

c. Date and Time;

d. Project Information and Location;

e. General Location and Name of Street

f. Weather Conditions

7. Include in the recording coverage of all surface and other site features located in areas to be affected by the Work. Include at a minium, roadways, driveways, sidewalks, curbs, culverts, headwalls, retaining walls, buildings, above-ground utilities, parks, lawns, landscaping, trees, tree canopies, shrubbery, and fences. In addition, if properties are near the site, include views from behind the curb, the sidewalk and grass areas, driveways, and fronts of residences. Provide side and rear views of the exterior of the residence, along with the interior of all structures adjacent to the construction. Run interior videos along the corners of each room or the subject structure. Clearly show and document existing damage prior to the commencement of work. Supply the Engineer with the signatures of any resident not allowing the internal/ external survey of existing residential structures on an appropriate form.

8. Identify houses and structures visually and verbally by house number in such a manner that structures of the proposed system (i.e., manholes on a sewer system) can be located by reference.

9. Provide continuous coverage (i.e., do not turn the camera off once recording has begun) to the greatest extent possible.

10. Do not exceed a rate of travel for video recording of 44 feet per minute. Halt forward motion of the camera when viewing objects or structures outside the limits of the street or easement being documented. Provide a distance from the camera lens to the ground of not less than 12 feet. If not accessible by motorized vehicle, determine the distance from ground to shoulder height of the camera operator.

11. Pan and zoom in and out at a reasonable rate so as to control sufficiently the clarity of objects being viewed.

12. Furnish all auxiliary lighting as required to produce a quality recording.

13. Do not perform video recording if the weather is not acceptable, such as rain, fog, mist, or elongated shadows that distort perception and tend to prevent clear resolution.

14. Retain the original unedited media and photographs for seven (7) years after the date of the final acceptance.

15. Provide a monthly video of the construction area and related temporary traffic signage. In the monthly video, include a walk through the project area, showing all construction and related temporary traffic signage. Deliver (2) copies of the monthly progress video as described herein.

E. **Execution of Photographs:**

1. Prior to beginning the work, and upon the completion of work, take photographs along both private property lines at fifty (50) foot intervals within the project limits. Take two views at each fifty (50) foot interval. In one view, show up-station along the roadway, in the other view show the property line side view at the station perpendicular to the roadway travel edge.

2. In addition, during the progress of work, take twelve (12) photos every month consisting of various features, as directed by the ENGINEER.

3. Take 4”x6” or 8”x10” Hard copy photographs with a digital format camera, which is capable of imprinting in the lower righthand corner of the image, the date of the photograph. Submit photographs as 4”x6” or 8”x10” glossy color prints of commercial quality and which are clear, sharp and that encompass depth of field. Submit photographs in protective sleeves and number and index photos to a master list to be furnished with the prints. Furnish the master index list neatly bound and provide within at minimum, the date and time of the photograph, the station location of the photograph, the direction of view, and the image number. Furnish two (2) copies of digital photographs with each set of photographs as JPEG images on CD ROM or USB drive devices.

4. Take photographs with a digital format camera, which imprints in the lower righthand corner of the image; the date of the photograph and picture or frame number. Provide digital photographs of commercial quality and which are clear, sharp and encompass depth of field. Include the master list on the USB drive with the

photographs, and contain at a minimum, the date and time of the photograph, the station/ location of the photograph, the direction of view, and the image number. Two (2) copies of digital photographs shall be furnished to the owner as JPEG images on CD ROM or USB drive devices.

3.13 APPLICATIONS FOR PAYMENT

A. Submit applications for Payment to the ENGINEER at the times stipulated in the General Conditions.

B. Submit applications which contain both an application and continuation pages, along with all substantiating documentation detailed herein or as deemed necessary by the ENGINEER. Type the application and continuation sheets in the format specified herein and created on 8-1/2" x 11" paper.

C. Submit Applications for Payment typed on American Institute of Architects (AIA) Form G-702. Submit continuation sheets on American Institute of Architects (AIA) Form G-703.

D. Populate the application form (AIA G-702) in accordance with the form instructions and as prescribed below:

1) Include required information, including Change Orders executed prior to the date of the application;

2) Include summary of dollar amounts to agree with totals depicted within continuation sheets;

3) Execute certification by a Corporate Principal.

4) Where directed by the OWNER, ensure that applications are notarized by a Notary Public Registered in the State of Louisiana.

E. Populate the continuation sheets (AIA G-703) in accordance with the form instructions and as prescribed below:

1) If the project is to be conducted under a Lump Sum Contract, include list of all scheduled items of the WORK per the Schedule of Values with each as a single line item. Include list of all payment items included in Section 01025 – Measurement and Payment with each as a single line item.

2) Fill in dollar amount in each column for each line item on the continuation page.

3) List each Change Order executed prior to date of submission at the end of the continuation pages.

4) Submit copies of paid invoices for stored materials, along with photos of stored materials in the amount and quality deemed acceptable by the ENGINEER.

F. Prior to submittal of the completed Application for Payment, submit to the ENGINEER an electronic copy of a "draft" Application for Payment, including all substantiating documentation for review. Create the draft application in Adobe Acrobat Portable Document Format (.PDF). Undertake all revisions as required by the ENGINEER prior to submitting the completed application for payment.

G. When the ENGINEER finds the application for payment correct, he will instruct the CONTRACTOR to submit the completed application for approval and transmittal to the OWNER. Submit the number of applications for payment as determined at the pre – construction conference.

H. The ENGINEER will not collate or assemble Applications for Payment. Assembly of the Application for Payment are the sole responsibility of the CONTRACTOR.

I. Submit construction progress photographs documenting progress of the WORK with applications for payment. Submit updated schedules and progress narratives as specified within these specifications with applications for payment.

3.14 CHANGE ORDER PROCEDURES

A. Implement and abide by the procedures for Change Orders as specified herein and the General Conditions.

B. Provide full written data as required or requested for the evaluation of changes by the OWNER and ENGINEER;

C. Maintain detailed records of work done on a time – and – material or force account basis.

D. Provide full documentation to the ENGINEER upon request.

E. Designate in writing the member of the CONTRACTOR's organization who is authorized to accept changes in the WORK and who is responsible of informing others in the CONTRACTOR's employ of the authorization for changes in the WORK.

F. The OWNER will designate in writing the person who is authorized to execute change orders.

G. The OWNER or ENGINEER may initiate changes to the WORK by submitting a Proposal Request to the CONTRACTOR. Such a request is to be for information. Do not construe such a request as an authorization to execute the WORK. This request will include, but not necessarily be limited to, the following items:

1) Detailed description of the proposed change, products, and location of the proposed change to the WORK;

2) Supplementary or revised drawings and/or specifications;

3) Projected time for making the change, and a specific statement as to whether or not overtime work is or is not authorized;

4) A specific period of time for which the requested price is to remain valid.

H. The CONTRACTOR may initiate a request for changes to the WORK by submitting a written notice to the ENGINEER containing at a minimum the following items:

1) A description of the proposed changes;

2) Statement of the reason for making the changes

3) Statement of the effect on the Contract Price and Contract Time;

4) Statement of the effect on the work of separate CONTRACTORs;

5) Documentation supporting any change in the Contract Sum or Contract Time, as appropriate.

I. Support each quotation for a lump-sum proposal, and for each unit price which has not previously been established, with sufficient substantiating data to allow Engineer to evaluate the quotation.

J. On request of the ENGINEER or OWNER, provide additional data to support time and cost computations, such as the following:

1) Labor Required;

2) Equipment Required;

3) Products required (recommended source of purchase and unit cost, quantities required);

4) Taxes, insurance, and bonds;

5) Credit for WORK deleted from the Contract;

6) Overhead and Profit;

7) Justification for any changes in the Contract Time.

K. Support each claim for additional costs, and for work done on a time-and-material/force account basis, with documentation as required for a lump-sum proposal, plus additional information, such as the following:

1) Name of the OWNER's authorized agent who ordered the work, and date of the order;

2) Dates and time work was performed, and by whom;

3) Time record, summary of hours worked, and hourly rates paid;

4) Receipts and invoices for equipment used listing dates and times of use;

5) Receipts and invoices for products used, including quantities;

6) Receipts and invoices for subcontracts.

L. The ENGINEER will prepare each Change Order.

M. Use the OWNER's standard change order form, which will be provided to the CONTRACTOR.

N. The Change Order will describe changes in the Work, both additions and deletions, with attachments of revised Contract Documents to define details of the change.

O. The Change Order will provide an accounting of adjustment in the Contract Sum and Contract Times.

P. The content of Lump Sum/Fixed Price Change Orders will be based on, either:

1) ENGINEER's Proposal Request and CONTRACTOR's responsive proposal as mutually agreed upon between OWNER and CONTRACTOR;

2) CONTRACTOR's Proposal for change to the WORK, as recommended by the ENGINEER.

Q. OWNER and ENGINEER will sign and date the Change Order as authorization for the CONTRACTOR to proceed with the changes.

R. CONTRACTOR may sign and date the Change Order to indicate agreement with the terms therein.

S. The content of Unit Price Change Orders will be based on, either:

1) ENGINEER'S definition of scope of the required Changes in the WORK;

2) CONTRACTOR's proposal for a Changes in the WORK, as recommended by the ENGINEER;

3) Survey of completed work.

T. The amounts of the unit prices will be either:

1) Those stated in the Agreement;

2) Those mutually agreed upon between OWNER and CONTRACTOR.

U. When quantities of the items affected by the Change Order can be determined prior to the start of the work, employ the following procedure:

1) OWNER and ENGINEER will sign and date the Change Order as authorization for the CONTRACTOR to proceed with the changes;

2) CONTRACTOR may signe and date the Change Order to indicate agreement with the terms therein.

V. When quantities of the items affected by the Change Order cannot be determined prior to the start of the work, employ the following procedure:

1) The ENGINEER or OWNER will issue a construction change authorization directing CONTRACTOR to proceed with the change on the basis of unit prices, and will cite the applicable unit prices.

2) At the completion of the change, the ENGINEER will determine the cost of such work based upon the unit prices and quantities of work performed. Submit documentation sufficient in the opinion of the ENGINEER to establish the change in Contract Sum and Contract Time.

3) The ENGINEER will sign and date the Change Order to establish the change in Contract Sum and Contract Time.

4) OWNER and CONTRACTOR will sign and date the Change Order to indicate their agreement with the terms included therein.

W. Periodically revise Schedule of Values and application for payment forms to record each change as a separate item of WORK, and to reflect the adjusted Contract Price.

X. Periodically revise the Construction Schedule to reflect Change Orders as specified herein.

Y. Upon completion of WORK under a Change Order, enter pertinent changes into the Record Documents.

3.15 CONSTRUCTION PROGRESS PHOTOGRAPHS

A. Furnish construction progress photographs showing the progress of the WORK. Use a competent photographer to take photos via digital format of a resolution sufficient for documentation of the work and acceptable to the Engineer. Provide a log with the date of photographing, the project title, short description of what is in the photograph, and the direction the camera is facing.

B. Starting when the WORK begins and for as long as the WORK is in progress, not less than twelve (12) photographs at intervals no longer than two (2) weeks apart, consisting of different angles or views at different locations of progress on the site. Furnish digital photographs to the ENGINEER within one (1) week. Digital photographs become property of the OWNER upon submittal by the CONTRACTOR.

C. Submit construction progress photographs with applications for payment.

D. Upon completion of the WORK but before final payment, make an additional twenty (20) photographs of the WORK as directed by the ENGINEER. For the purposes of documenting the completed work, deliver digital photographs and logs to the ENGINEER for transmittal to the OWNER.

3.16 CONTRACTOR SUBMITTALS, SAMPLING, AND TESTING:

A. Wherever submittals are required in the Contract Documents, submit them to the ENGINEER.

B. **Shop Drawings:** Wherever called for in the Contract Documents or where required by the ENGINEER, furnish to the ENGINEER for review, a number and type of each Shop Drawing submittal as established by the OWNER or ENGINEER. Shop Drawings may include detail design calculations, shop-prepared drawings, fabrication and installation drawings, erection drawings, lists, graphs, catalog sheets, data sheets, and similar items. Whenever the CONTRACTOR is required to submit design calculations as part of a submittal, such calculations, ensure that the calculations bear the signature and seal of an engineer registered in the appropriate branch and in the state wherein the project is located, unless otherwise indicated. Submit all submittal documents with the CONTRACTOR's standard submittal transmittal form. Sign all submittals as an indication that they have been reviewed for completeness and organization.

1. **Organization**: Use a single submittal transmittal form for each technical specification section or item or class of material or equipment for which a submittal is required. A single submittal covering multiple sections will not be acceptable, unless the primary specification references other sections for components. Example: if a pump section references other sections for the motor, shop-applied protective coating, anchor bolts, local control panel, and variable frequency drive, a single submittal would be acceptable. A single submittal covering vertical turbine pumps and horizontal split case pumps would not be acceptable.

2. Unless indicated otherwise, match terminology and equipment names and numbers used in submittals to those used in the Contract Documents.

3. Assign each submittal a unique number. Number submittals sequentially, and clearly note the submittal numbers on the transmittal. Assign original submittals a numeric submittal number followed by a letter of the alphabet to distinguish between the original submittal and each resubmittal. For example, if submittal 25-A requires a resubmittal, the first resubmittal will bear the designation "25-B" and the second resubmittal will bear the designation "25-C" and so on.

4. Disorganized submittals that do not meet the requirements of the Contract Documents will be returned without review.

5. Except as may otherwise be indicated, the ENGINEER will return a copy of each submittal to the CONTRACTOR with comments noted thereon, within 30 Days following receipt by the ENGINEER. It is considered reasonable that the CONTRACTOR will make a complete and acceptable submittal to the ENGINEER by the first resubmittal on an item. The OWNER reserves the right to withhold monies due to the CONTRACTOR to cover additional costs of the ENGINEER's review beyond the first resubmittal. The ENGINEER'S maximum review period for each submittal or resubmittal will be 30 Days. Thus, for a submittal that requires 2 resubmittals before it is complete, the maximum review period could be 90 Days.

6. If a submittal is returned to the CONTRACTOR marked “REVIEWED-NO EXCEPTIONS," formal revision and resubmission will not be required. If a submittal is returned marked "REVIEWED- EXCEPTIONS NOTED," make the corrections on the submittal, but formal revision and resubmission will not be required. If a submittal is returned marked "REVISE AND RESUBMIT," revise it and resubmit the required number of copies to the ENGINEER for review. Resubmittal of portions of multi-page or multi-drawing submittals will not be allowed. For example, if a Shop Drawing submittal consisting of 10 drawings contains one drawing noted as "REVISE AND RESUBMIT," the submittal as a whole is deemed "REVISE AND RESUBMIT," and 10 drawings are required to be resubmitted. If a submittal is returned marked "REJECTED," either that the proposed material or product does not satisfy the specification, the submittal is so incomplete that it cannot be reviewed, or is a substitution request not submitted in accordance with the requirements of the Contract Documents. In the first 2 cases, prepare a new submittal and submit the required number of copies to the ENGINEER for review. In the latter case, submit the substitution request according to the Contract Documents. Fabrication of an item may commence only after the ENGINEER has reviewed the pertinent submittals and returned copies to the CONTRACTOR marked either "REVIEWED-EXECPTIONS NOTED" or "REVIEWED-NO EXCEPTIONS." Do not take corrections indicated on requirements of the Contract Documents as changes to the contract requirements. Re -submittal of rejected portions of a previous submittal will not be allowed. Identify and flag every change from a submittal to a resubmittal or from a resubmittal to a subsequent resubmittal on the resubmittal.

7. Carefully review submittals of the CONTRACTOR prior to submission to the ENGINEER. Sign and date each submittal by the CONTRACTOR as being correct and in strict conformance with the Contract Documents. In the case of Shop Drawings, date and sign each sheet. Note any deviations from the Contract Documents on the transmittal sheet. The ENGINEER will only review submittals that have been so verified by the CONTRACTOR. Non-verified submittals will be

returned to the CONTRACTOR without action taken by the ENGINEER, and any delays caused thereby are the total responsibility of the CONTRACTOR.

8. Corrections or comments made on the CONTRACTOR's Shop Drawings during review do not relieve the CONTRACTOR from compliance with Contract Drawings and Specifications. Review is for conformance to the design concept and general compliance with the Contract Documents only. The CONTRACTOR is responsible for confirming and correlating quantities and dimensions, fabrication processes and techniques, coordinating WORK with the trades, and satisfactory and safe performance of the WORK.

C. **Certificates:** Where certificates are required, submit them to the ENGINEER as specified herein. For materials, regardless of an approved certificate, the ENGINEER may still test the material if in his opinion it is questionable upon delivery. The abbreviations and definitions of certificates are as follows:

1. **Certificate of Analysis**: Certificate from the manufacturer or supplier of actual test results of the material properties. (This also includes "mill test reports.") Furnish a Certificate of Analysis with each lot of material delivered to the work.

2. **Certificate of Compliance**: Certificate from the manufacturer or supplier stating that the material complies with the required specifications. Furnish a Certificate of Compliance with each lot of material delivered to the work.

D. **Record Drawings:** Maintain one set of Drawings at the Site for the preparation of record drawings. On these, mark every project condition, location, configuration, and any other change or deviation which may differ from the Contract Drawings at the time of award, including buried or concealed construction and utility features that are revealed during the course of construction. Give special attention to recording the horizontal and vertical location of buried utilities that differ from the locations indicated, or that were not indicated on the Contract Drawings. Supplement said record drawings by any detailed sketches as necessary or as CONTRACTOR is directed, to fully indicate the WORK as actually constructed. These record drawings are the CONTRACTOR's representation of as-built conditions. Include revisions made by addenda and change orders, and maintain the record drawings up-to-date during the progress of the WORK. Use red ink for alterations and notes. Identify relevant Change Orders with notations by number and date. Disorganized or incomplete record drawings will not be accepted. Revise them and resubmit within 10 Days. Maintain record drawings as accessible to the ENGINEER during the construction period. Final payment will not be acted upon until the record drawings have been completed and delivered to the ENGINEER.

3.17 SANITARY, HEALTH, AND SAFETY PROVISIONS

A. Do not require any worker to work under conditions which are unsanitary, hazardous or dangerous to health or safety. Maintain the work in a sanitary, safe and nonhazardous condition.

B. Provide and maintain in a neat, sanitary condition, restrooms and other such accommodations for use of employees and ENGINEER or OWNER personnel. Comply with requirements of the State and local governments for such facilities.

C. **Sanitary and Other Organic Wastes**: Establish a regular daily collection of all sanitary and organic wastes. Dispose of all wastes and refuse from sanitary facilities provided by the CONTRACTOR or organic material wastes from any other source related to the CONTRACTOR's operations of away from the Site in a manner satisfactory to the ENGINEER and in accordance with all laws and regulations pertaining thereto.

D. **Toilet Facilities:** Provide fixed or portable chemical toilets wherever needed for the use of CONTRACTOR's employees. Do not rely on the OWNER's facilities or facilities of adjacent businesses. Comply with the requirements of Subpart D, Section 1926.51 of the OSHA Standards for Construction for such facilities.

3.18 BARRICADES AND WARNING SIGNS

A. Provide, erect and maintain necessary barricades, suitable lights, danger signals, signs and other traffic control devices, including flaggers, and take all necessary precautions for protection of the work and safety of the public. Protect highways closed to traffic by effective barricades. Provide suitable warning signs to direct traffic.

3.19 USE OF EXPLOSIVES

A. Do not use explosives.

3.20 ARCHEOLOGICAL AND HISTORICAL FINDINGS

A. If cultural artifacts or archaeological or historical sites are discovered, discontinue operations. The ENGINEER will contact the proper authorities in order that an appropriate assessment may be made to determine the disposition thereof and necessary actions relative to the site. When directed, excavate the site to preserve the artifacts encountered. Such excavation will be paid for as extra work, including an appropriate adjustment in contract time. Borrow and muck disposal areas furnished by the CONTRACTOR will be subject to such assessment prior to use.

3.21 TEMPORARY UTILITIES

A. Provide all temporary utilities necessary for the proper execution of the WORK in the most efficient manner practical. Bear the he cost of provision of these temporary utilities include all costs associated therewith in the price of the WORK.

B. Provide either new or used materials and equipment, which are in substantially undamaged condition and without significant deterioration and which are recognized in the construction industry, by compliance with appropriate standards, as being suitable for intended use in each case. Where a portion of temporary utility is provided by utility company, provide the remaining portion with matching and compatible materials and equipment and comply with recommendations of utility company.

C. **Power:** Provide power required for operations under the Contract and provide and maintain all temporary power lines required to perform the WORK in a safe and satisfactory manner.

D. **Temporary Power Distribution**: Provide a weatherproof, grounded, temporary power distribution system sufficient for performance of entire WORK of project, including temporary electrical heating where indicated, operation of test equipment and test operation of building equipment and systems which cannot be delayed until permanent power connections are operable, temporary operation of other temporary facilities, including permanent equipment and systems which must be placed in operation prior to use of permanent power connections (pumps, HVAC equipment, elevators, and similar equipment), and power for temporary operation of existing facilities (if any) at the Site during change-over to new permanent power system. Provide circuits of adequate size and proper power characteristics for each use; run circuit wiring generally overhead, and rise vertically in locations where it will be least exposed to possible damage from construction operations and will result in minimal interference with performance of the WORK; provide rigid steel conduit or equivalent raceways for wiring which must be

exposed on grade, floors, decks, or other exposures to damage or abuse. Properly install and maintain wiring for temporary electric light and power and maintained and securely fasten such wiring in place. Conform to the requirements of Subpart K of the OSHA Safety and Health Standards for Construction for such temporary electrical facilities.

E. **Construction Lighting:** Suitably light WORK conducted at night or under conditions of deficient daylight to ensure proper WORK and to afford adequate facilities for inspection and safe working conditions.

F. **Temporary Lighting**: Provide a general, weatherproof, grounded temporary lighting system in every area of construction work, as soon as overhead floor/roof deck structure has been installed to provide sufficient illumination for safe work and traffic conditions. Run circuit wiring generally overhead, and rise vertically in locations where it will be least exposed to possible damage from construction operations on grade, floors, decks, or other areas of possible damage or abuse.

G. **Construction Water:** Provide an adequate supply of water of a quality suitable for all domestic and construction purposes. Do not make connection to or draw water from any fire hydrant or pipeline without first obtaining permission of the authority having jurisdiction over the use of said fire hydrant or pipeline and from the agency owning the affected water system. For each such connection made, first attach to the fire hydrant or pipeline a valve and a meter, if required by the said authority, of a size and type acceptable to said authority and agency. Pay all permit and water charges.

3.22 SITE ACCESS AND STORAGE

A. Make a thorough investigation of the condition of available public and private roads and of clearances, restrictions, bridge load limits, and other limitations affecting transportation and ingress and egress to the site of the WORK. Construct and maintain any haul roads required for its construction operations.

B. Provide continuous, unobstructed, safe, and adequate pedestrian and vehicular access to residences, fire hydrants, commercial and industrial establishments, churches, schools, parking lots, service stations, motels, fire and police stations, and hospitals. Provide safe and adequate public transportation stops and pedestrian crossings at intervals not exceeding 300. Cooperate with parties involved in the delivery of mail and removal of trash and garbage so as to maintain existing schedules for such services. Maintain vehicular access to residential driveways to the property line except when necessary construction precludes such access for reasonable periods of time.

C. Wherever necessary, to maintain vehicular crossings, provide suitable temporary bridges or steel plates over unfilled excavations, except in such cases as the where the written consent of the responsible individuals or authorities to omit such temporary bridges or steel plates has been obtained. Where such consent is obtained, provide copies to the ENGINEER prior to excavation. Maintain such bridges or plates in service until access is provided across the backfilled excavation. Comply with the requirements of the authority having jurisdiction in each case for temporary bridges or steel plates for street and highway crossing. Adopt designs furnished by said authority for such bridges or steel plates or submit designs to said authority for approval, as may be required.

D. Nothing herein entitles the CONTRACTOR to the exclusive use of any public street, alleyway, or parking area during the performance of the WORK hereunder. Conduct operations to not interfere unnecessarily with the authorized work of utility companies or other agencies in such streets, alleyways, or parking areas.

E. Do not close any street, alleyway, highway, or roadway to the public without first obtaining permission of the ENGINEER and proper governmental authority. Where excavation is being performed in primary streets or highways, maintain one lane in each direction open to traffic at all times unless otherwise indicated. Provide toe boards to retain excavated material if required by the ENGINEER or the agency having jurisdiction over the street or highway. Keep fire hydrants on or adjacent to the WORK accessible to fire-fighting equipment at all times. Make temporary provisions by the CONTRACTOR to assure the use of sidewalks and the proper functioning of all gutters, storm drain inlets, and other drainage facilities.

F. The OWNER may designate and arrange for the CONTRACTOR's use, a portion of the property for its exclusive use during the term of the Contract as a storage and shop area for its construction operations on the WORK. At completion of WORK, return this area to its original condition, including grading and landscaping.

G. Make all arrangements for any necessary off-Site storage or shop areas necessary for the proper execution of the WORK.

H. Construct and use a separate storage area for hazardous materials used in constructing the WORK.

3.23 QUALITY CONTROL

A. Establish and maintain an effective quality control process which consist of plans, procedures, and organization necessary to provide materials, equipment, workmanship, fabrication, construction and operations which comply with the contract requirements. Cover construction operations both onsite and offsite, and keyed to the proposed construction sequence.

3.24 PROTECTION OF THE WORK

A. Assume responsibility and pay for the protection of the site, and all WORK, materials, equipment and existing facilities thereon, against theft, vandals, and other unauthorized persons as a part of the WORK.

B. Make no claim against OWNER by reason of any act of an employee or trespasser. Make good all damage to OWNER's property resulting from his failure to provide security measures as specified.

C. Provide security measures at least equal to those usually provided to protect the existing facilities during normal operation, but also include such additional security fencing, barricades, lighting, watchman services and other measures as required to protect the site.

D. Maintain the security of any limited access areas as required by the Owner.

E. Maintain charge and care of the WORK until final acceptance. Take precautions against damages to the WORK by action of the elements or from other cause, and satisfactorily repair any damaged work as a part of the WORK. In case of suspension of the WORK for any reason, assume responsibility for all materials and properly store them if necessary. Erect temporary structures where necessary.

F. If the CONTRACTOR fails to comply with the provisions of this section, the ENGINEER will notify the CONTRACTOR, in writing, of such noncompliance. If the CONTRACTOR fails to remedy unsatisfactory maintenance within 48 hours after receipt of such notices,

the ENGINEER may immediately proceed to provide security for the project, and the cost of this security will be deducted from payments for the work.

G. If unsatisfactory maintenance results in a condition that is hazardous to life, health or property, the ENGINEER will immediately effect necessary repairs and deduct the cost of such repairs from payments for the work.

3.25 PROJECT CLOSEOUT

A. Promptly remove from the vicinity of the completed WORK, all rubbish, unused materials, concrete forms, construction equipment, and temporary structures and facilities used during construction. Final acceptance of the WORK by the OWNER will be withheld until the CONTRACTOR has satisfactorily performed the final cleanup of the Site.

B. Establish dates for equipment testing, acceptance periods, and on-site instructional periods (as required under the Contract). Establish such dates not less than one week prior to beginning any of the foregoing items, to allow the OWNER, the ENGINEER, and their authorized representatives sufficient time to schedule attendance at such activities.

- END OF SECTION -

SECTION 01025 - MEASUREMENT AND PAYMENT

PART 1 -- GENERAL

1.1 THE REQUIREMENT

A. Payment for the various items on the Bid Form, as further specified herein, will include all compensation to be received by the CONTRACTOR for furnishing all tools, equipment, supplies, and manufactured articles, and for all labor, operations, and incidentals appurtenant to the items of work being described, as necessary to complete the various items of the WORK all in accordance with the requirements of the Contract Documents, including all appurtenances thereto, and including all costs of permits and cost of compliance with the regulations of public agencies having jurisdiction, including Safety and Health Requirements of the Occupational Safety and Health Administration of the U.S. Department of Labor (OSHA). No separate payment will be made for any item that is not specifically set forth in the Bid Schedule. therefore, include all costs of the WORK in the prices named in the Bid Schedule for the various appurtenant items of WORK.

1.2 ACCURACY

A. The ENGINEER will be the judge of the accuracy of measurements, or approximations made in lieu of accurate determinations and these decisions will be binding upon both the CONTRACTOR and the OWNER.

B. The ENGINEER will utilize the accepted Schedule of Values for the purpose of estimating the value of WORK completed for the evaluation of requests for payment.

C. In computing volumes of excavation, the average end area method or other acceptable methods will be used.

D. When United States standard units are used, the pound or the ton will be the standard units of weight. The term "ton," in the United States standard, will mean the short ton of 2,000 pounds avoirdupois. Weigh materials measured or proportioned by weight on approved scales by qualified personnel at designated locations. If material is shipped by rail, the car weight may be accepted provided the weight of material only will be paid for; however, car weights will not be acceptable for material to be passed through mixing plants. Weigh trucks used to haul material being paid by measured weight empty at such times as directed; and provide each truck a plainly legible identification mark.

E. Haul materials specified to be measured by volume in hauling vehicles in approved vehicles that will be measured at the point of delivery on the project. Vehicles may be of any acceptable size or type, provided the body is of such shape that the volume can be readily and accurately determined. Load vehicles to at least a predetermined permanently fixed mark, which defines a known volume, upon arrival at the point of delivery. Vehicles will be measured in increments of 0.5 cubic yard, except that when tailgate spreader-boxes are used to place aggregate materials for asphaltic surface treatment, the volume of the spreader-ox will be added to the volume of the vehicle. When materials are measured by weight and converted to volume for payment, conversion will be made to the nearest 0.1 cubic yard.

F. Where decimal places are included in the estimated quantities shown in the Bid Form, the ENGINEER will round quantities to the same number of decimal places shown in the estimated quantities on the Bid Form.

G. The terms "lump sum, each, or unit" when used as a unit of measure for payment will mean complete payment for the work described in the contract. Portions of lump sum items may be paid where deemed acceptable by the ENGINEER and OWNER based upon an estimate of the proportion of the WORK of the lump sum item acceptably completed in accordance with the Contract Documents. The ENGINEER may utilize an accepted Schedule of Values to make such determinations. Provide all supporting documentation requested by the ENGINEER in this regard.

1.3 REMOVAL OF STRUCTURES AND OBSTRUCTIONS (REF. NO. 201(02))

A. **Measurement:** No Measurement will be made for this item.

B. **Payment:** Payment for this item will be made at, or in portions thereof based upon the estimated amount of the WORK completed, of the lump sum bid price named on the bid form. Payment of said price listed on the Bid Form constitutes full compensation to be paid to the CONTRACTOR for this item, inclusive of all labor, products and materials, equipment, and services necessary for the removal of structures and obstructions, including but not limited to disposal of debris, all in accordance with the requirements of the Contract Documents.

1.4 TEMPORARY ENVIRONMENTAL CONTROLS (REF. NO. 204)

A. **Measurement:** No measurement will be made for this item.

B. **Payment:** Payment for this item will be made at the lump sum price on the Bid Form, or in portions thereof in accordance with the table below. Payment of said price listed on the Bid Form constitutes full compensation to be paid to the CONTRACTOR for this item, inclusive of all labor, products and materials, equipment, and services necessary for the complete provision of all temporary environmental controls required by the Contract Documents and local, State, and Federal laws, including, but not limited to the installation and maintenance of temporary environmental controls, development and maintenance of all required pollution prevention plans and associated permit fees, and all other temporary environmental controls all in accordance with the requirements of the Contract Documents.

Percent of Total Contract Amount Earned:	**Allowable Percent of Lump Sum Price for Temporary Environmental Controls:**
First Application for Payment	*40*
25	*60*
50	*80*
75	*95*
100	*100*

1.5 TEMPORARY TRAFFIC CONTROL (REF. NO. 713)

A. **Measurement:** No Measurement will be made for this item.

B. **Payment:** Payment for this item will be made at the lump sum price on the Bid Form, or in portions thereof in accordance with the table below. Payment of said price listed on the Bid Form constitutes full compensation to be paid to the CONTRACTOR for this item, inclusive of all labor, products and materials, equipment, and services necessary for the complete provision of all temporary traffic control, inclusive of development and implementation of the traffic control plan, maintenance of traffic control devices, diaries, records, and all other items required by the Contract Documents all in accordance with the requirements of the Contract Documents.

Percent of Total Contract Amount Earned	Allowable Percent of Lump Sum Price for Temporary Traffic Control
Initial Erection of Temporary Traffic Controls	40
25	60
50	80
75	95
100	100

1.6 SEEDING (REF. NO. 717)

A. **Measurement:** No measurement will be made for this item.

B. **Payment:** Payment for this item will be made at the lump sum price on the Bid Form, or in portions thereof in accordance with the table below. Payment of said price listed on the Bid Form constitutes full compensation to be paid to the CONTRACTOR for this item, inclusive of all labor, products and materials, equipment, and services necessary for seeding including surface preparation, placement of sod, establishment, and all other items required all in accordance with the requirements of the Contract Documents.

1.7 FERTILIZER (REF. NO. 718)

A. **Measurement:** No Measurement will be made for this item.

B. **Payment:** Payment for this item will be made at, or in portions thereof based upon the estimated amount of the WORK completed, of the lump sum bid price named on the bid form. Payment of said price listed on the Bid Form constitutes full compensation to be paid to the CONTRACTOR for this item, inclusive of all labor, products and materials, equipment, and services necessary for the fertilization of all lawn areas affected by construction, including but not limited to soil testing, provision and placement and blending of agricultural lime and/or fertilizer into the grade as

necessary to aid the establishment of sodding, all in accordance with the requirements of the Contract Documents.

1.8 MOBILIZATION (REF. NO. 727)

A. **Measurement:** No measurement will be made for this item.

B. **Payment:** Payment for this item will be made at the lump sum price on the Bid Form, or in portions thereof in accordance with the table below. Payment of said price listed on the Bid Form constitutes full compensation to be paid to the CONTRACTOR for this item, inclusive of all labor, products and materials, equipment, and services necessary for the successful mobilization and de – mobilization to and from the site, all in accordance with the requirements of the Contract Documents.

Percent of Total Contract Amount Earned	**Allowable Percent of Lump Sum Price for Mobilization**
1st Application for Payment	*25*
10	*50*
25	*75*
50	*100*

1.9 CONSTRUCTION LAYOUT AND SURVEYING (REF. NO. 740)

A. **Measurement:** No measurement will be made for this item.

B. **Payment:** Payment for this item will be made at the lump sum price on the Bid Form, or in portions thereof in accordance with the table below. Payment of said price listed on the Bid Form constitutes full compensation to be paid to the CONTRACTOR for this item, inclusive of all labor, products and materials, equipment, and services necessary for the complete and accurate layout of all WORK, including but not limited to the recovery and establishment of baselines, elevations, traverses, and measurements all in accordance with the requirements of the Contract Documents.

Percent of Total Contract Amount Earned:	**Allowable Percent of Lump Sum Price for Construction Layout:**
First Application for Payment	*40*
25	*60*
50	*80*
75	*95*
100	*100*

1.10 FURNISH AND INSTALL REINFORCED CAST-IN-PLACE CONCRETE JUNCTION BOX TO ENCLOSE OPEN AREA BETWEEN EXISTING RCPA CULVERT AND EXISTING REINFORCED CONCRETE BOX CULVERT (REF. NO. S-1)

A. **Measurement:** No measurement will be made for this item.

B. **Payment:** Payment for this item will be made at the lump sum price on the Bid Form. Payment of said price listed on the Bid Form constitutes full compensation to be paid to the CONTRACTOR for this item, inclusive of all labor, products and materials, equipment, and services necessary for installation of the cast-in-place reinforced concrete enclosure including the necessary formwork, grouting, concrete, reinforcement, access framing and grating, bedding material, granular material backfill, geotextile fabric, dowels, etc. to complete this item of Work in accordance with the Drawings and these Specifications.

1.11 FILLING AND GRADING SITE TO DRAIN (REF. NO. S-2)

A. **Measurement:** No measurement will be made for this item.

B. **Payment:** Payment for this item will be made at the lump sum price on the Bid Form. Payment of said price listed on the Bid Form constitutes full compensation to be paid to the CONTRACTOR for this item, inclusive of all labor, products and materials, equipment, and services necessary for the filling and grading of the area surrounding the enclosure to drain to existing drainage outlets.

1.12 INITIAL INSTALLATION AND FINAL REMOVAL OF DAMS (REF. NO. S-3)

A. **Measurement:** No measurement will be made for this item.

B. **Payment:** Payment for this item will be made at the lump sum price on the Bid Form. Payment of said price listed on the Bid Form constitutes full compensation to be paid to the CONTRACTOR for this item, inclusive of all labor, products and materials, equipment, and services necessary for initial installation and final removal of temporary dams (inclusive of disposal) in accordance with the requirements of the Contract Documents. Include costs associated with furnishing, installing and operating the accepted dry weather flow by-pass system in this item.

1.13 DAM REMOVAL AND REPLACEMENT (REF. NO. S-4)

A. **Measurement:** Measurement for this item will be made based upon the number of occurrences for dam removal and replacement as ordered by the OWNER or ENGINEER.

B. **Payment:** Payment for this item will be made at the unit price, each, listed on the Bid Form. Payment of said price listed on the Bid Form constitutes full compensation to be paid to the CONTRACTOR for this item, inclusive of all labor, products and materials, equipment, and services necessary for removal, disposal of, and re–installation of temporary dams where ordered by the ENGINEER in accordance with the requirements of Contract Documents.

PART 2 -- PRODUCTS (NOT USED)

PART 3 -- EXECUTION (NOT USED)

- END OF SECTION –

SECTION 01030 – SUBMITTALS, SAMPLING, AND TESTING PLAN

PART 1 -- GENERAL

1.1 THE REQUIREMENT

A. Provide submittals and cooperate with quality control and acceptance testing in accordance with the requirements of the Contract Documents. This list is not necessarily exhaustive. It is solely provided to aid the CONTRACTOR in determining which submittals and sampling are anticipated. Additional submittals may be required. Provide additional submittals not listed at no additional cost to the OWNER.

1.2 SUBMITTALS AND SAMPLING LIST

A. The list contained within Part 3 - Execution comprises the minimum submittals which are anticipated to be required for the CONTRACTOR to the ENGINEER in accordance with Section 01010. Additional submittals and testing may be required by the ENGINEER at his discretion. If additional submittals and samples are required, provide them at no additional cost to the OWNER.

PART 2 -- PRODUCTS

2.1 NOT USED

PART 3 -- EXECUTION

3.1 SUBMITTALS AND SAMPLING - SPECIAL PROVISIONS

A. **Submittals:** Submit the following:

1. Davis Bacon Records (as required by the OWNER)

2. Agreements with Property Owners for Disposal

3. Notice of Utility Disruptions

4. Critical Path Construction Schedule

B. **Sampling:** No materials are anticipated to be sampled under this Section.

C. **Testing:** No testing laboratory tests are anticipated under this Section.

3.2 SUBMITTALS AND SAMPLING - GENERAL REQUIREMENTS

A. **Submittals: Submit the following:**

1. Bar Chart Construction Schedule;

2. Roadway Closure Requests;

3. Site Conditions Surveys (Pre – Construction Video and Photos)

4. Change Order Proposals (Only if Required)

5. Requests for Payment

B. **Sampling:** No materials are anticipated to be sampled under this Section.

C. **Testing:** No testing laboratory tests are anticipated under this Section.

3.3 SUBMITTALS AND SAMPLING – MOBILIZATION

A. **Submittals:** No submittals are anticipated to be required under this Section.

B. **Sampling:** No materials are anticipated to be sampled under this Section.

C. **Testing:** No testing laboratory tests are anticipated under this Section.

3.4 SUBMITTALS AND SAMPLING – EARTHWORK

A. **Submittals:** Submit the following:

1. Excavation Plan:

2. Dewatering Plan:

3. Source of proposed backfill material;

4. Source of proposed bedding and haunching materials;

5. Product data for Geotextile Fabric, including evidence of listing on the LDOTD AML.

B. **Sampling:** The following items are anticipated to be sampled for testing under this Section:

1. River Sand for Backfill: Submit two (2) standard LDOTD Sample Sacks for evaluation by the Testing Laboratory for each source.

2. Bedding and Haunching Material: Submit two (2) standard LDOTD Sample Sacks for evaluation by the Testing Laboratory for each source.

3. Geotextile Fabric: Will not be sampled unless quality is questioned by the Engineer.

C. **Testing:** The following tests are anticipated under this Section:

1. River Sand for Backfill: Material will be tested for deleterious materials and gradation. Moisture – density relationships of acceptable material will be tested and reported in accordance with DOTD TR 418. In – Place Density and Determination of In – Place Moisture Content will be determined by DOTD TR 401 and DOTD TR 403, respectively. Frequency of In – Place Moisture Density and In – Place Density will be at the discretion of the ENGINEER.

2. Bedding and Haunching Material: Material will be tested for deleterious materials and gradation. Moisture – density relationships of acceptable material will be tested and reported in accordance with DOTD TR 418. In – Place Density and Determination of In – Place Moisture Content will be determined by DOTD TR 401 and DOTD TR 403, respectively. Frequency of In – Place Moisture Density and In – Place Density will be at the discretion of the ENGINEER.

3. Geotextile Fabric: Material will not be tested unless questionable.

3.5 SUBMITTALS AND SAMPLING - DEMOLITION AND REMOVAL

A. **Submittals:** Submit the following:

1. Submit and reconstruction activities and procedures, including operational sequence, to the ENGINEER for approval. Provide for safe conduct of the WORK, careful removal and disposition of materials and equipment, protection of existing facilities which are to remain undisturbed, coordination with existing facilities to remain in service, and timely disconnection and reconnection of utility services. Include a detailed description and time schedule of the methods and equipment to be used for each operation and the sequence of operation. Include a storage plan for materials to be salvaged or delivered to the OWNER.

B. **Sampling:** No materials are anticipated to be sampled under this Section.

C. **Testing:** No testing laboratory tests are anticipated under this Section.

3.6 SUBMITTALS AND SAMPLING - TEMPORARY ENVIRONMENTAL CONTROLS

A. **Submittals:**

1. Where a stormwater pollution prevention plan is required, submit to the ENGINEER as specified herein. Submit all activity reports as required by permits as applicable.

2. Where certificates, inspection reports, or other items are required, submit to the ENGINEER as specified herein.

B. **Sampling:** No materials are anticipated to be sampled under this Section.

C. **Testing:** No testing laboratory tests are anticipated under this Section.

3.7 SUBMITTALS AND SAMPLING, SECTION 02302 – CLASS II BASE COURSE (Not Applicable This Project)

A. **Submittals: Submit the following:**

1. Source of the proposed base course material.

B. **Sampling:**

1. Submit a sample of Class II Base Course Material from each source proposed to be utilized in the WORK to the ENGINEER or Testing Laboratory for source approval. Provide six (6) full Louisiana Department of Transportation and Development standard sample sacks, or as directed by the Testing Lab. Complete approval for each source of material utilized in the WORK.

C. **Testing:**

1. Moisture – Density Relationships: Material will be tested for deleterious materials and gradation. Moisture – density relationships of acceptable material will be tested and reported in accordance with DOTD TR 418.

2. In – Place Density and Determination of In – Place Moisture Content will be determined by DOTD TR 401 and DOTD TR 403, respectively. Frequency of In – Place Moisture Density and In – Place Density will be at the discretion of the ENGINEER.

3.8 SUBMITTALS AND SAMPLING - ASPHALT CONCRETE MIXTURES (Not Applicable This Project)

A. **Submittals: Submit the following:**

1. Asphalt Cement - Submit product data for the asphalt cement to be utilized. Include evidence of the product's current listing on the LDOTD AML.

2. Additives – Submit product data for all additives to be utilized. Include evidence of each product's current listing on the LDOTD AML.

3. Aggregates: Provide a listing of sources for all aggregates to be utilized.

4. Submit a job – mix formula as specified herein. Use format equivalent to the LDOTD Job Mix Formula form, or other format as acceptable to the ENGINEER provided that all required information is provided. Include evidence of the certification of the LDOTD certified asphalt technician who will supervise the production of mixtures at the asphalt plant.

B. **Sampling:** Sampling and testing will be as per Section 02502, Part 3 – Execution. The ENGINEER will sample aggregates at his option. If requested, provide two (2) standard LDOTD sample sacks of each aggregate to be utilized in mixtures.

3.9 SUBMITTALS AND SAMPLING - ASPHALT CONCRETE EQUIPMENT AND PROCESSES (Not Applicable This Project)

A. **Submittals: Submit the following:**

1. Name, information, and plant process diagram of all plants proposed to produce asphaltic concrete mixes to be incorporated into the WORK. Include name and location of the asphaltic concrete plant(s), certificates indicating that the asphaltic concrete plant is certified in accordance with current LDOTD Standards, name and current certifications of the asphaltic concrete plant certified technicians, and other information on plant and processes sufficient for the ENGINEER to review the acceptability of the proposed plant. Submit information on pavers, MTV's and all other equipment to be utilized in suitable detail to determine compliance with specification requirement.

B. **Sampling:** No materials are anticipated to be sampled under this Section.

C. **Testing:** No testing laboratory tests are anticipated under this Section.

3.10 SUBMITTALS AND SAMPLING – ASPHALT TACK COATS (Not Applicable This Project)

A. **Submittals:** Submit the following:

1. Product data on all tack coats to be utilized. Include evidence of each product's current listing on the LDOTD AML.

B. **Sampling:** No materials are anticipated to be sampled under this Section.

C. **Testing:** No testing laboratory tests are anticipated under this Section.

3.11 SUBMITTALS AND SAMPLING – ASPHALTIC PRIME COATS (Not Applicable This Project)

A. **Submittals:** Submit the following:

1. Product data on all prime coats to be utilized. Include evidence of each product's current listing on the LDOTD AML.

B. **Sampling:** No materials are anticipated to be sampled under this Section.

C. **Testing:** No testing laboratory tests are anticipated under this Section.

3.12 SUBMITTALS AND SAMPLING – MILLING ASPHALT PAVEMENT (Not Applicable This Project)

A. **Submittals: Submit the following:**

1. Information on proposed milling machine, and disposal location of millings.

B. **Sampling:** No materials are anticipated to be sampled under this Section.

C. **Testing:** No testing laboratory tests are anticipated under this Section.

3.13 SUBMITTALS AND SAMPLING – FLOWABLE FILL (Not Applicable This Project)

A. **Submittals:** Submit the following:

1. Mix Design: Submit a proposed mix designs on a form acceptable to the ENGINEER giving the intended sources of materials and the mix design for fill to be furnished. Review and acceptance of this mix design does not release the CONTRACTOR from the responsibility of producing flowable fill that meets the minimum requirements of the specifications.

2. Product Data: Submit product data for all components included in the mixture, including evidence of all product's current listing on the LDOTD AML.

B. **Sampling:** No materials are anticipated to be sampled under this Section.

C. **Testing:** No testing laboratory tests are anticipated under this Section.

3.14 SUBMITTALS AND SAMPLING – TEMPORARY TRAFFIC CONTROL

A. **Submittals: Submit the following:**

1. Submit product information on all temporary traffic control devices and products to be utilized or incorporated into the WORK. Include evidence of each product's listing on the LDOTD AML, compliance with applicable standards, and any other information required sufficient for the ENGINEER to review the acceptability of the proposed products.

2. Prior to the start of the WORK, submit a traffic control device plan, clearly depitcing the arrangement of all temporary traffic control devices for all phases or portions of the WORK. Clearly depict all temporary traffic control device products to be utilized, along with appropriate certifications to be included therewith. Provide a plan which has been prepared under the supervision of a licensed professional engineer registered in the State of Louisiana and signed and sealed by such. Include product

data detailing all traffic control devices to be utilized. Do not begin WORK on public roads until such time as this plan has been submitted and reviewed by the ENGINEER.

3. Prior to the start of the WORK, submit to the ENGINEER proof of the TCS and TCT authorizations. TCS's and TCT must meet all requirements of the Louisiana Department of Transportation and Development's requirements for such personnel.

B. **Sampling:** No materials are anticipated to be sampled under this Section.

C. **Testing:** No testing laboratory tests are anticipated under this Section.

3.15 SUBMITTALS AND SAMPLING – SODDING (Not Applicable This Project)

A. **Submittals:** Submit the following:

1. Product/source information on the seeding to be provided, in suitable detail for determination of compliance with specification requirements.

B. **Sampling:** No materials are anticipated to be sampled under this Section.

C. **Testing:** No testing laboratory tests are anticipated under this Section.

D. **Submittals:** Submit the following:

1. Product/source information on the fertilizer to be provided, in suitable detail for determination of compliance with specification requirements.

E. **Sampling:** No materials are anticipated to be sampled under this Section.

F. **Testing:** No testing laboratory tests are anticipated under this Section.

3.16 SUBMITTALS AND SAMPLING – CONSTRUCTION LAYOUT

A. **Submittals:** No submittal is required under this section.

B. **Sampling:** No materials are anticipated to be sampled under this Section.

C. **Testing:** No testing laboratory tests are anticipated under this Section.

3.17 SUBMITTALS AND SAMPLING – WATER DISTRIBUTION SYSTEMS (Not Applicable This Project)

A. **Submittals:** Submit the following:

1. Product Data, Piping:

a. Layout drawings including necessary dimensions, details, pipe joints, fittings, specials, bolts and nuts, gaskets, valves, appurtenances, anchors, guides, and material lists. Indicate all spacers, adapters, connectors, fittings, and pipe supports to accommodate the equipment and valves in a complete and functional system.

b. Gasket Material: Submit gasket manufacturer's catalog indicating that the recommended product is suitable for each fluid service application.

c. Modular Seals for Pipe: Manufacturer's catalog sheet showing materials and installation procedures.

2. Product Data; Valves: Submit product information on each valve type to be incorporated into the WORK. Include the following information: Valve name, size, Cv factor, pressure rating, identification; Complete information on valve actuator, including size, manufacturer, model number, and mounting Assembly drawings showing part nomenclature, materials, dimensions, weights, and relationships of valve handles, handwheels, position indicators, and all other components.

3. Product Data, Service Tubing: Provide product data in sufficient detail for the ENGINEER to determine compliance with specification requirements.

4. Product Data, Tapping Sleeve and Valve Provide product data in sufficient detail for the ENGINEER to determine compliance with specification requirements.

5. Product Data, Service Saddle and Corporation Stop: Provide product data in sufficient detail for the ENGINEER to determine compliance with specification requirements.

6. Pressure testing and disinfection plan, showing:

a. A testing plan and schedule, including method for water conveyance, control, disposal, and disinfection.

B. **Sampling:** No materials are anticipated to be sampled under this Section.

C. **Testing:** No testing laboratory tests are anticipated under this Section.

3.18 SUBMITTALS AND SAMPLING - SANITARY SEWER SYSTEMS (Not Applicable This Project)

A. **Submittals:** Submit the following:

1. Product Data, Piping:

a. Layout drawings including necessary dimensions, details, pipe joints, fittings, specials, bolts and nuts, gaskets, valves, appurtenances, anchors, guides, and material lists. Indicate all spacers, adapters, connectors, fittings, and pipe supports to accommodate the equipment and valves in a complete and functional system.

b. Gasket Material: Submit gasket manufacturer's catalog indicating that the recommended product is suitable for each fluid service application.

c. Modular Seals for Pipe: Manufacturer's catalog sheet showing materials and installation procedures.

2. Product Data; Valves: Submit product information on each valve type to be incorporated into the WORK. Include the following information: Valve name, size, Cv factor, pressure rating, identification; Complete information on valve actuator, including size, manufacturer, model number, and mounting Assembly drawings showing part nomenclature, materials, dimensions, weights, and relationships of valve handles, handwheels, position indicators, and all other components.

3. Product Data, Service Tubing: Provide product data in sufficient detail for the ENGINEER to determine compliance with specification requirements.

4. Product Data, Tapping Sleeve and Valve Provide product data in sufficient detail for the ENGINEER to determine compliance with specification requirements.

5. Product Data, Service Saddle and Corporation Stop: Provide product data in sufficient detail for the ENGINEER to determine compliance with specification requirements.

6. Pressure testing plan, showing:

a. A testing plan and schedule, including method for water conveyance, control, and disposal

B. **Sampling:** No materials are anticipated to be sampled under this Section.

C. **Testing:** No testing laboratory tests are anticipated under this Section.

3.19 SUBMITTALS AND SAMPLING – STRUCTURAL CONCRETE

A. **Submittals:** Submit the following:

1. Curing Material: Burlap cloth, white polyethylene sheeting, combination burlap cloth and white polyethylene sheeting, and waterproof paper will be sampled if quality of the material is questionable in the opinion of the ENGINEER.

2. Form Release Agent - Submit to the ENGINEER evidence of listing of the proposed product on the LDOTD AML.

3. Epoxy Resin Systems – Submit to the ENGINEER evidence of listing of the proposed product on the LDOTD AML.

4. Formwork: Submit formwork drawings, showing complete details of all proposed forming and temporary shoring.

5. Precast Concrete:

a. Prior to fabrication of precast concrete, submit product data, shop drawings, and other information as required suitable for the ENGINEER to evaluate the suitability of the proposed product. Provide shop drawings for standard precast concrete units for approval by the ENGINEER. Show complete design, installation, and construction information in such detail as to enable the ENGINEER to determine the adequacy of the proposed units for the intended purpose. Include of steel reinforcement size and placement as well as supporting design calculations or documentation that the proposed unit meets reference standards.

b. Provide shop drawings for custom precast concrete units furnished by the precast concrete producer for approval by the ENGINEER. Demonstrate that the applicable industry design standards and other design standards as specified or indicated on the drawings have been met. Include installation and construction information on shop drawings. Include of steel reinforcement size and placement as well as supporting design calculations for all custom precast units. Produce precast concrete units in accordance with the accepted drawings. Supply precast concrete unit design calculations and concrete mix

design proportions and appropriate mix design test data. Provide design calculations signed by a licensed professional engineer registered in the State of Louisiana. Supply copies of material certifications and/or laboratory test reports, including mill tests and all other test data, for portland cement, blended cement, pozzolans, ground granulated blast-furnace slag, silica fume, aggregate, admixtures, and curing compound proposed.

c. Submit methods of repairs for all precast concrete structures.

B. **Sampling:** See Section 03901 – Portland Cement Concrete.

C. **Testing:** See Section 03901 – Portland Cement Concrete.

3.20 SUBMITTALS AND SAMPLING – REINFORCEMENT

A. **Submittals: Submit the following:**

1. Before placing reinforcing steel, furnish a list of all reinforcing steel showing location, mark number, size and type bend.

2. Furnish the ENGINEER placing plans for all structures where reinforcing steel is involved, unless the plans contain sufficient detail for proper placement of reinforcing steel. Show the location, type and spacing of supports.

3. submit to the ENGINEER the name and address of each mill providing reinforcing steel. For each type of reinforcement to be used, submit a statement that the material meets the requirements of this section. submit the name, address, and current status of mills listed on the LDOTD AML to provide steel for the project.

B. **Sampling:** No materials are anticipated to be sampled under this Section.

C. **Testing:** No testing laboratory tests are anticipated under this Section.

3.21 SUBMITTALS AND SAMPLING – PORTLAND CEMENT CONCRETE

A. **Submittals: Submit the following:**

1. Submit a proposed concrete mix designs on a form acceptable to the ENGINEER giving the intended sources of materials and the mix design for concrete for each concrete mixture to be furnished.

2. Product Data: Submit product data for all components included in the mixture, including evidence of all product's current listing on the LDOTD AML.

B. **Sampling/Testing:**

1. Structural Concrete (Classes AA(M), AA, A(M), A, D, F, P(X), P(M), S - The ENGINEER will conduct the following acceptance tests of a per – lot basis. Unless noted otherwise, a lot is defined as an identifiable placement of concrete not to exceed 200 cubic yards.

a. Entrained Air: Plastic concrete will be tested for air content at least once per lot or as otherwise determined by the ENGINEER. The air content will be determined in accordance with LDOTD TR 202.

b. Slump: Plastic concrete will be tested for slump at least once per lot or as otherwise determined by the ENGINEER. The slump of plastic concrete will be determined in accordance with LDOTD TR 207.

c. Compressive Strength: Compressive strength for acceptance of structural concrete will be determined by DOTD TR 226. Two (2) batches of three (3) 6 – inch by 12 – inch cylinders will be made and tested in accordance with DOTD TR 226 for each lot of structural concrete placed.

d. Batch Tickets: Provide batch tickets for each batch of concrete as indicated in Part 3 – Execution.

2. Minor Structural Concrete (Classes M, R, Y) - The ENGINEER will conduct the following acceptance tests of a per – lot basis. Unless noted otherwise, a lot for minor concrete will be 50 cubic yards, regardless of day placed.

a. Entrained Air: Plastic concrete will be tested for air content at least once per lot or as otherwise determined by the ENGINEER. The air content will be determined in accordance with LDOTD TR 202.

b. Slump: Plastic concrete will be tested for slump at least once per lot or as otherwise determined by the ENGINEER. The slump of plastic concrete will be determined in accordance with LDOTD TR 207.

c. Compressive Strength: Compressive strength for acceptance of structural concrete will be determined by DOTD TR 226. Two (2) batches of three (3) 6 – inch by 12 – inch cylinders will be made and tested in accordance with DOTD TR 226 for each lot of structural concrete placed.

d. Batch Tickets: Provide batch tickets for each batch of concrete as indicated in Part 3 – Execution.

3.22 SUBMITTALS AND SAMPLING – PIPING (Not Applicable This Project)

A. **Submittals: Submit the following:**

1. Layout drawings including necessary dimensions, details, pipe joints, fittings, specials, bolts and nuts, gaskets, valves, appurtenances, anchors, guides, and material lists. Inidcate spacers, adapters, connectors, fittings, and pipe supports to accommodate the equipment and valves in a complete and functional system.

2. Gasket Material: Submit gasket manufacturer's catalog indicating that the recommended product is suitable for each fluid service application.

3. Modular Seals for Pipe: Manufacturer's catalog sheet showing materials and installation procedures.

B. **Sampling:** No materials are anticipated to be sampled under this Section.

Testing: No testing laboratory tests are anticipated under this Section.

- END OF SECTION –

SECTION 01727 – MOBILIZATION

PART 1 -- GENERAL

1.1 GENERAL

A. Mobilize as required for the proper performance and completion of the WORK and in accordance with the Contract Documents.

B. Include at least the following items as part of the WORK of this section:

1. Moving onto the Site of CONTRACTOR's plant and equipment necessary for the first month of operations.

2. Installing temporary construction power, wiring, and lighting facilities.

3. Establishing fire protection system.

4. Developing construction water supply.

5. Providing on-Site sanitary facilities and potable water facilities.

6. Arranging for and erection of CONTRACTOR's WORK and storage yards.

7. Constructing and implementing security features and requirements as specified.

8. Obtaining required permits.

9. Having OSHA required notices and establishing safety programs.

10. Having the CONTRACTOR's superintendent at the Site full time.

11. Submitting initial submittals.

1.2 PAYMENT FOR MOBILIZATION

A. The CONTRACTOR's attention is directed to the condition that no payment for mobilization, or any part thereof, will be recommended for payment under the Contract until mobilization items listed above have been completed.

PART 2 -- PRODUCTS (NOT USED)

PART 3 -- EXECUTION (NOT USED)

- END OF SECTION –

SECTION 02003 – AGGREGATES

PART 1 -- GENERAL

1.1 THE REQUIREMENT

A. Provide aggregates as specified herein and elsewhere required by the Contract Documents.

1.2 CONTRACTOR SUBMITTALS, SAMPLING, AND TESTING

A. Provide submittals, samples for testing, and testing of materials in accordance with Section 01010 – Summary of the Work and General Requirements and Section 01030 – Submittals, Sampling and Testing Plan.

1.3 REFERENCE STANDARDS

A. **American Association of State Highway and Transportation Officials (AASHTO)**

AASHTO PP 65-11	*Standard Practice for Determining the Reactivity of Concrete Aggregates and Selecting Appropriate Measures for Preventing Deleterious Expansion in New Concrete Construction*
AASHTO T 19	*Standard Method of Test for Bulk Density (Unit Weight) and Voids in Aggregate*
AASHTO T 21	*Standard Method of Test for Organic Impurities in Fine Aggregates for Concrete*
AASHTO T 71	*Standard Method of Test for Effect of Organic Impurities in Fine Aggregate on Strength of Mortar*
AASHTO T 84	*Standard Method of Test for Specific Gravity and Absorption of Fine Aggregate*
AASHTO T 85	*Standard Method of Test for Specific Gravity and Absorption of Coarse Aggregate*
AASHTO T 96	*Standard Method of Test for Resistance to Degradation of Small-Size Coarse Aggregate by Abrasion and Impact in the Los Angeles Machine*
AASHTO T 104	*Standard Method of Test for Soundness of Aggregate by Use of Sodium Sulfate or Magnesium Sulfate*
AASHTO T 278	*Standard Method of Test for Surface Frictional Properties Using the British Pendulum Tester*
AASHTO T 279	*Standard Method of Test for Accelerated Polishing of Aggregates Using the British Wheel*
AASHTO T 327	*Standard Method of Test for Resistance of Coarse Aggregate to Degradation by Abrasion in the Micro-Deval Apparatus*

AASHTO TP 57-99	*Standard Method of Test for The Qualitative Detection of Harmful Clays of the Smectite Group in Aggregates Using Methylene Blue*

B. **ASTM International (ASTM)**

ASTM C289	*Standard Test Method for Potential Alkali-Silica Reactivity of Aggregates*
ASTM C586	*Standard Test Method for Potential Alkali Reactivity of Carbonate Rocks as Concrete Aggregates*
ASTM C1260	*Standard Test Method for Potential Alkali Reactivity of Aggregates*
ASTM D2321	*Standard Practice for Underground Installation of Thermoplastic Pipe for Sewers and Other Gravity-Flow Applications*
ASTM D4791	*Standard Test Method for Flat Particles, Elongated Particles, or Flat and Elongated Particles in Coarse Aggregate*

C. **Louisiana Department of Transportation and Development (DOTD)**

LDOTD AML	*Louisiana DOTD Approved Materials List*
TR 111	*Abrasion of Lightweight Coarse Aggregate*
TR 112	*Amount of Material Finer than No. 200 Sieve in Aggregate*
TR 113	*Sieve Analysis of Fine and Coarse Aggregates*
TR 119	*Determination of Deleterious Materials*
TR 120	*Sand Equivalent Value of Soils and Fine Aggregate*
TR 121	*Fine Aggregate Angularity - FAA (Uncompacted Void Content of Fine Aggregate)*
TR 122	*Determination of pH Value for Aggregates*
TR 306	*Determination of Percentage of Crushed Particles for Coarse Aggregates*
TR 309	*Mechanical Analysis of Extracted Aggregate*
TR 322	*Determining the Effect of Moisture on Asphaltic Concrete Paving Mixture*
TR 413	*Organic Material in Soil*
TR 423	*Classification of Soils and Soil-Aggregate Mixtures for Highway Construction Purposes*

TR 428 *Determining the Atterberg Limits of Soils*

TR 430 *Determination of pH Value of Water or Soil*

1.4 QUALITY CONTROL

A. Locate, select, deliver, and place material conforming to specification requirements and requirements shown on the drawings. Control processes, perform tests, and make adjustments as necessary to result in a uniform product meeting all the requirements of the drawings and specifications.

B. The following test methods will be utilized for the testing, classification and acceptance of aggregates:

Material Property	**Test Procedure**
Deleterious Materials	*DOTD TR 119*
Flat and Elongated Particles	*ASTM D4791*
Magnesium Sulfate Soundness	*AASHTO T 104*
Los Angeles Abrasion	*AASHTO T 96*
Alkali – Silica Reactivity (Chemical Method)	*ASTM C289*
Alkali Reactivity (Mortar – Bar Method)	*ASTM C1260*
Reactivity of Concrete Aggregates	*AASHTO PP65-11*
Alkali Reactivity of Carbonate Rocks (Rock – Cylinder Method)	*ASTM C586*
Organic Impurities	*AASHTO T 21*
Unit Weight	*AASHTO T 19*
Specific Gravity and Absorption of Fine Aggregate	*AASHTO T 84*
Specific Gravity and Absorption of Coarse Aggregate	*AASHTO T 85*
Polish Value	*AASHTO T 278 and T 279*
Amount of Material Finer than the No. 200 Sieve	*DOTD TR 112*
Sieve Analysis (Gradation)	*DOTD TR 113*

pH of Soil and Water	*DOTD TR 430*
pH of Aggregates	*DOTD TR 122*
Atterberg Limits	*DOTD TR 428*
Organic Content	*DOTD TR 413*
Percent Crushed	*DOTD TR 306*
Mechanical Analysis of Extracted Aggregate	*DOTD TR 309*
Sand Equivalent	*DOTD TR 120*
Fine Aggregate Angularity	*DOTD TR 121*
Micro – Deval	*AASHTO T 327*
Moisture Sensitivity	*DOTD TR 322*
Mortar Strength	*AASHTO T 71*
Methylene Blue	*AASHTO TP 57-99*

1.5 DELIVERY, STORAGE, AND HANDLING

A. Deliver, store, and handle aggregates as recommended by the supplier of the aggregates and as specified herein. Prevent unwanted mixing or segregation of aggregate stockpiles.

PART 2 -- PRODUCTS

2.1 GENERAL REQUIREMENTS FOR AGGREGATES

A. Use aggregates that are environmentally acceptable for the intended use from a source acceptable to the ENGINEER. For an aggregate source to be approved, comply with the general requirements within this subsection and requirements for specific aggregate applications contained within this section and other specifications sections.

B. **Deleterious Materials:** Conform to the following deleterious materials table for source approval and/or project acceptance:

Property	**Per Cent Maximum**
Wood	0.05
Clay Lumps	0.5

Clay Lumps and Friable Particles	3.0
Coal and Lignite	1.0
Flat and Elongated Particles (5:1)	15.0
Flat and Elongated Particles (3:1)	25.0
Glassy Particles	10.0
Iron Ore	2.0
Total of Wood, Clay Lumps, Friable Particles, Iron Ore, Lignite and Other Foreign Matter	5.0

C. **Magnesium Sulfate Soundness:** For source approval coarse natural aggregates and recycled portland cement concrete (RPCC), the maximum soundness loss is 15 percent when subjected to 5 cycles of the magnesium sulfate soundness test.

D. **Los Angeles Abrasion:** For coarse natural aggregates and RPCC source approval, maximum Los Angeles abrasion loss is 40.0 percent.

E. **Friction Ratings:** Where specified herein or in other specifications sections, use aggrgates which comply with the requirements for friction ratings as defined in the table below and as indicated on the *LDOTD AML (*formerly QPL 2).

Friction Rating	**Description**
I	Aggregates that have a Polish Value of greater than 37 or demonstrate the ability to retain acceptable friction numbers for the life of the pavement.
II	Aggregates that have a Polish Value of 35 to 37 or demonstrate the ability to retain acceptable friction numbers for the life of the pavement.
III	Aggregates that have a Polish Value of 30 to 34 or demonstrate the ability to retain acceptable friction numbers for the life of the pavement
IV	Aggregates with a Polish Value of less than 30

2.2 AGGREGATES FOR SURFACE COURSE

A. **General:** Comply with the General Requirements for Aggregates.

B. **Stone for Surface Course:** Comply with the following gradation.

U.S. Sieve Size	**Percent Passing by Weight**
1-1/2 Inches	100

¾ Inch	50 – 100
No. 4	35-65
No. 40	10-32
No. 200	3-15

For material passing the No. 40 sieve, comply with the following requirements:

Liquid Limit, Maximum	25
Plasticity Index, Maximum	5

C. **Reclaimed Asphalt Pavement for Surface Course:** Use recycled asphalt concrete pavement complying with the following:

U.S. Sieve Size	Percent Passing by Weight
2 Inches	100
No. 4	35-75

2.3 AGGREGATES FOR ASPHALT MIXTURES

A. ***General:*** Comply with the general requirements for aggregates. Use only stone, gravel, slag, lightweight aggregates, and coarse and manufactured sand sources from the *LDOTD AML.* RAP and fine natural sand are required to be from an approved Producer/Supplier. Use clean and durable crushed stone for all coarse aggregates for SMA mixtures. Use 100 percent crushed stone or manufactured sand for fine aggregates for SMA Mixtures. Coarse aggregate is all material retained on or above the No. 4 sieve. Fine aggregate is all material passing the No. 4 sieve. Additional requirements for aggregates for asphalt mixtures are included in the asphaltic mixture sections.

B. ***Coarse Aggregate for Asphalt Mixtures:*** **F**or coarse aggregate stockpiles, determine Coarse Aggregate Angularity in accordance with *DOTD TR 306* (Double Face), and determine Flat and Elongated in accordance with *ASTM D4791*.

C. ***Fine Aggregate for Asphalt Mixtures:*** For fine aggregate stockpiles, determine Fine Aggregate Angularity in accordance with *DOTD TR 121*, and Sand Equivalent (SE) in accordance with *DOTD TR 120*. SE is not required for manufactured sands (screenings), nor for fine aggregate stockpiles having 25 percent or more passing the No. 200 sieve.

D. ***Natural Sand for Asphalt Mixtures:*** Natural sand is non-plastic material consisting of clean, hard, durable, siliceous grains graded from coarse to fine and reasonably free from vegetative matter, clay balls, clay lumps, or other deleterious materials as per the general requirements for aggregates. Use a material with a gradation with a maximum of

25 percent passing the No. 200 sieve. Clay lumps may not exceed 0.5 percent by weight when sampled from the stockpile and tested in accordance with *DOTD TR 119.*

E. Manufactured Sand for Asphalt Mixtures: Manufactured sand (screenings) is the fine aggregate material generated during the crushing and processing of coarse aggregates. Sand Equivalent testing is not required; fine aggregate angularity testing is required.

F. Reclaimed Asphalt Pavement for Asphalt Mixtures: Use RAP which is approved either at the time of removal from the roadway or in stockpiles. Make all stockpile quality control records available at the ENGINEER's request. Include RAP quantities and delivery date, quantities delivered to projects, daily moisture contents, weekly asphalt cement content, and weekly RAP Gse in all records. Before feeding RAP into the plant, crush or screen all pieces that are larger than 2 inches.

G. Mineral Filler for Asphalt Mixtures: Use material listed on the LDOTD AML which consists of limestone dust, pulverized hydrated lime, Portland cement, cement stack dust, or lime kiln dust. Mineral dust collected in bag houses or by other dust collectors at asphalt concrete plants is not classified as mineral filler. Cement stack dust must consist of material collected from waste rotary kiln gases discharged through a collector of a cement plant. Comply with the following:

U.S. Sieve Size	Percent Passing by Weight
No. 30	100
No. 80	95-100
No. 200	70-100
No. 270	60-100

H. Lightweight Aggregate for Asphalt Mixtures: Use a lightweight aggregate consisting of cubical fragments which are of uniform density and are free from an excess of foreign matter.

2.4 AGGREGATES FOR PORTLAND CEMENT CONCRETE

A. **General:** Use aggregates from the Approved Materials List in Portland cement concrete and mortar.

B. **Fine Aggregate for Portland Cement Concrete and Mortar:** Use natural silica sand. For fine aggregate used in all Portland cement concrete except Types B and D gradations, conform to the following gradations:

Gradation for Fine Aggregate for Portland Cement Concrete	
U.S. Sieve Size	**Percent Passing by Weight**
3/8 Inch	100

No. 4	95-100
No 16	45-90
No. 50	7-30
No. 100	0-7
No. 200	0 – 3
Gradation for Mortar Sand	
U.S. Sieve Size	**Percent Passing by Weight**
No. 4	100
No. 8	95-10
No. 100	0-25
No. 200	0-10

C. ***Uncrushed Coarse Aggregate***: For uncrushed coarse aggregate used in all Portland cement concrete except Types B and D gradations, use material which complies with the following:

Gradation for Uncrushed Coarse Aggregate for Portland Cement Concrete			
U.S. Sieve Size	**Size 57M**	**Size 89M**	**Size 67**
2 – ½ Inch	--	--	--
2 Inch	--	--	--
1 – ½ Inch	100	--	--
1 Inch	90-100	--	100
¾ Inch	--	100	90-100
½ Inch	25-60	90-100	--
3/8 Inch	--	--	20-55
No. 4	0-10	15-60	0-10
No. 8	0-5	0-30	0-5

No. 16	--	0-5	--
No. 200	0-1	0-1	0-1

D. Crushed Coarse Aggregate: For crushed coarse aggregate used in all portland cement concrete, except Types B and D gradations, comply with the uncrushed coarse aggregate gradations for uncrushed coarse aggregate, except that when the material finer than the No. 200 sieve consists of the dust fraction from crushing, essentially free of clay, this percentage is limited be 0-2 percent. When the total material passing the No. 200 sieve from the coarse and fine aggregates does not exceed 5 percent, the percent passing the No. 200 sieve from the crushed coarse aggregate may be increased to 3 percent.

E. Portland Cement Concrete Aggregates – Combined Gradations: For the combined aggregates for the proposed Portland cement concrete combined gradation mix, the percent retained based on the dry weight of the total aggregates must meet the requirements below for the type of concrete specified in in the Master Proportion Table for Portland Cement Concrete. Sample and test each type of aggregate stockpile to be used in the proposed mixture individually. Mathematically determine the percent of total combined aggregates retained using the proportions of the combined aggregate blend. Base all gradation calculations on percent of dry weight.

U.S. Sieve Size	**Percent Retained of Total Combined Aggregates**	
	Gradation Type	
	Type B	**Type D**
2 – ½ Inch	0	0
2 Inch	0	0-20
1 – ½ Inch	0-20	0-20
1 Inch	0-20	5-20
¾ Inch	5-20	5-20
½ Inch	5-20	5-20
3/8 Inch	5-20	5-20
No. 4	5-20	5-20
No. 8	5-20	5-20
No. 16	5-20	5-20
No. 30	5-20	5-20

No. 50	0-20	0-20
No. 100	0-20	0-20
No. 200	0-5	0-5
Note. For the sieves in the shaded areas, the sum of any two (2) adjacent sieves must be a minimum of 12 percent of the total combined aggregates.		

2.5 AGGREGATES FOR BEDDING MATERIAL

A. Comply with the General Requirements for Aggregates. Use stone, recycled portland cement concrete, or a mixture of either recycled portland cement concrete, gravel, crushed slag, or stone combined with granular material as specified herein.

B. **Stone for Bedding Material:** Comply with the following gradation.

U.S. Sieve Size	**Percent Passing by Weight**
1-1/2 Inches	100
1 Inch	90-100
¾ Inch	70-100
No. 4	35-65
No. 40	12-32
No. 200	5-12

For material passing the No. 40 (425 µm) sieve, comply with the following requirements:

Liquid Limit, Maximum	25
Plasticity Index, Maximum	5

C. **Recycled Portland Cement Concrete for Bedding Material:** Use material with the following gradation and will all material passing the No. 40 sieve being non – plastic.

U.S. Sieve Size	**Percent Passing by Weight**
1-1/2 Inches	100
1 Inch	90-100

¾ Inch	70-100
No. 4	35-65
No. 40	12-32
No. 200	0-8

2.6 PUMPED RIVER SAND

A. Comply with the General Requirements for Aggregates. Use a Mississippi River pumped sand. Use a pumped river sand which is classified as AASHTO A-4 or better when classified in accordance with *DOTD TR 423.* Use a material having a maximum plasticity index of 6. Use material free of trash, weeds, lumps, humus, or any other deleterious material per the General Requirements for Aggregates. Provide material with a group index number not to exceed 6.

PART 3 -- EXECUTION

3.1 GENERAL

A. Execution requirements for aggregates are contained within the specific specifications sections for the WORK into which the aggregates are being incorporated.

- END OF SECTION –

SECTION 02200 - EARTHWORK

PART 1 -- GENERAL

1.1 THE REQUIREMENT

A. Perform earthwork indicated and required for construction of the WORK, complete and in place, in accordance with the Contract Documents.

1.2 REFERENCE STANDARDS

A. **ASTM International (ASTM)**

ASTM D1140	*Standard Test Methods for Amount of Material in Soils Finer Than the No. 200 (75-um) Sieve*
ASTM D2487	*Standard Practice for Classification of Soils for Engineering Purposes (Unified Soil Classification System)*
ASTM D2974	*Standard Test Methods for Moisture, Ash, and Organic Matter of Peat and Other Organic Soils*
ASTM D3787	*Standard Test Method for Bursting Strength of Textiles Constant-Rate-of-Traverse (CRT) Ball Burst Test*
ASTM D4491	*Standard Test Methods for Water Permeability of Geotextiles by Permittivity*
ASTM D4253	*Standard Test Methods for Maximum Index Density and Unit Weight of Soils Using a Vibratory Table*
ASTM D4254	*Standard Test Methods for Minimum Index Density and Unit Weight of Soils and Calculation of Relative Density*
ASTM D4632	*Standard Test Method for Grab Breaking Load and Elongation of Geotextiles*
ASTM D4751	*Standard Test Methods for Determining Apparent Opening Size of a Geotextile*
ASTM D4533	*Standard Test Method for Trapezoid Tearing Strength of Geotextiles*
ASTM D4833	*Standard Test Method for Index Puncture Resistance of Geomembranes and Related Products*
ASTM G154	*Standard Practice for Operating Fluorescent Ultraviolet (UV) Lamp Apparatus for Exposure of Nonmetallic Materials*

B. **Louisiana Department of Transportation and Development (LDOTD)**

LDOTD AML	*Approved Materials List*

TR 401	*The Determination of In-Place Density*
TR 407	*Mechanical Analysis of Soils*
TR 411	*Dry Preparation of Disturbed Samples for Test*
TR 413	*Organic Material in Soil*
TR 415	*Field Moisture-Density Relationships*
TR 418	*Moisture - Density Relationships*
TR 423	*Classification of Soils and Soil-Aggregate Mixtures for Highway Construction Purposes*
TR 428	*Determining the Atterberg Limits of Soils*
TR 430	*Determination of pH Value of Water or Soil*

1.3 CONTRACTOR SUBMITTALS, SAMPLING, AND TESTING

A. Provide submittals, samples for testing, and testing of materials in accordance with Section 01010 – Summary of the Work and General Requirements and Section 01030 – Submittals, Sampling and Testing Plan.

1.4 QUALITY ASSURANCE

A. Locate, select, deliver, and place material conforming to specification requirements and requirements shown on the drawings. Control all processes, perform testing and make adjustments as necessary to result in a uniform product meeting all the requirements of the drawings and specifications.

B. Excavation, pile driving, shoring installation and removal and sheet pile installations may cause vibrations that may affect existing residences or underground utilities in the vicinity of WORK. Control particle velocities during the installation of and removal of shoring.

C. **Soil Usage and Classification**: Soils will be classified and tested in accordance with *DOTD TR 423, TR 428, TR 413, TR 407,* and *TR 430.*

1.5 DELIVERY, STORAGE, AND HANDLING

A. Deliver, store, and handle products for earthwork as recommended by the supplier of the materials and as specified herein. Prevent unwanted mixing or segregation of material stockpiles.

PART 2 -- PRODUCTS

2.1 SOIL USAGE

A. Do not blend soils which do not meet Liquid Limit or Plasticity Index to reduce Liquid Limit or Plasticity Index. Soils may be treated with Lime to reduce plasticity index only with the approval of the ENGINEER.

2.2 USABLE SOILS

A. Furnish natural soils that have a maximum plasticity index (PI) of 25 and a maximum organic content of 5 percent when classified. Soils with a silt content of 50 percent or greater and also a PI of 10 or less when classified will not be allowed.

2.3 SELECTED SOILS

A. Furnish natural soils with a maximum plasticity index (PI) of 20, maximum liquid limit of 35, and a maximum organic content of 5 percent. Soils with a silt content of 50 percent or greater and a PI of 10 or less will not be allowed.

2.4 DRAINAGE AND UTILITY PIPE

A. Backfill drainage and utility pipe with pumped river sand complying with the requirements of Section 02003 – Aggregates.

2.5 BEDDING MATERIAL

A. Use aggregate material as specified in Section 02003 – Aggregates.

2.6 TOPSOIL

A. When available, use existing surface soil that has been stripped and stockpiled. When additional topsoil is required beyond the available topsoil from the stripping operation, provide topsoil material delivered and amended as recommended by soil tests. Obtain and pay for soil tests prior to delivery of topsoil to the site to determine the quantities and type of soil amendments required to meet local growing conditions for the seed species provided. Test delivered topsoil, existing soil in smooth graded areas, and stockpiled topsoil for particle size, pH, organic content, textural class, chemical composition and soluble salts. Provide topsoil which is free from slag, cinders, stones, lumps of soil, sticks, roots, trash or other material over 1 ½ inches diameter. Use topsoil which is free from viable plants and plant parts. Use material which be free from debris, noxious weeds, toxic substances, or other materials harmful to plant growth. Use topsoil with a a minimum PI of 4, a maximum PI of 12, a pH of 5.5-8.0, a minimum organic content of 2 percent. Provide material that is capable of supporting adequate vegetation.

B. Deliver soil amendments to be blended with the topsoil to the site either in the original, unopened containers bearing the manufacturer's chemical analysis, or in bulk. Provide a chemical analysis for bulk deliveries.

C. Existing topsoil meeting the above requirements within construction limits may be used. If agricultural lime or organic matter is added to a soil to bring topsoil into conformance with these specifications, provide such amendments at no additional cost to the OWNER.

2.7 GEOTEXTILE FABRIC

A. Provide geotextrile fabric composed of at least 85 percent by weight (mass) of polyolefins, polyesters, or polyamides. Provide fabric that is resistant to chemical attack, rot, and mildew and that has no tears or defects which adversely alter its physical properties. When required, provide fabric which has stabilizers and/or inhibitors added to the base materials to make filaments resistant to deterioration due to ultraviolet and heat exposure. Provide geotextiles with finished edges to prevent the outer yarn from pulling away from the fabric. Fibers of other composition may be woven into the geotextile fabric for reinforcing purposes.

B. Furnish geotextile fabric rolls with an opaque, waterproof wrapping for protection against moisture and extended ultraviolet exposure prior to placement. Label each roll with the manufacturer's name, date of manufacture, lot number, and name of product.

C. Provide geotextiles that are listed on the *LDOTD AML* as approved for the application that geotextile is to be used for at the time of incorporation into the WORK.

D. Geotextile classes and materials requirements are defined in the table below:

Property	**Test Method**	**Class and Requirements**						
		A	**B**	**C**	**D**	**S**	**F**	**G**
AOS, Metric Sieve, µm, Max	*ASTM D4751*	300	300	212	600	850	850	850
Grab Tensile, N, Min.	*ASTM D4632*	330	400	580	800	800	400	400
% Elongation at Failure, Min.	*ASTM D4632*	--	--	50	50	--	--	--
% Elongation at 200N, Max.	*ASTM D4632*	--	--	--	--	--	--	50
Burst Strength, N, Min	*ASTM D3787*	440	620	930	1290	1390	--	--
Puncture, N, Min.	*ASTM D4833*	110	130	180	330	330	--	--
Trapezoid Tear Strength, N, Min.	*ASTM D4533*	110	130	180	220	220	--	--
Permittivity, Sec $^{-1}$, Min.	*ASTM D4491*	1.0	1.0	1.0	1.0	0.2	0.01	0.01
Grab Tensile Strength, Retained after Weathering 150H, UVA lamps, %, Min.	*ASTM D4491* *ASTM G154*	70	70	70	70	70	--	--
Grab Tensile Strength, Retained after Weathering 500H, UVA lamps, %, Min	*ASTM D4491* *ASTM G154*	--	--	--	--	--	70	70

2.8 GEOGRID

A. **General:** Provide a bi-axially oriented polymer grid structure composed of polypropylene or high-density polyethylene with apertures designed to interlock with the surrounding fill material. Weld or interweave joints at the crossover point in such a manner that the elements will not separate under handling and construction activities or under dynamic loads anticipated over the lifetime of the WORK. Use geogrid that is resistant to damage during construction, including ultraviolet light degradation, and that has long term resistance to chemical and biological degradation caused by the fill materials being reinforced.

B. Provide geogrid that complies the following minimum requirements. Numerical values represent minimum average roll values required in the designated direction:

Property	Test Method	Requirements
Aperture Size	I.D. Calipered	1.0 – 1.5 inch
Open Area, min	Corps of Engineers Method	70%
Flexural Rigidity, Minimum	*ASTM D1388*	0.018 lb – ft
Tensile Modulus at 2% Strain, Minimum	*ASTM D6637*	14,000 lb – fit
Junction Efficiency	*GRI GG2*	90%

2.9 MATERIALS FOR SHEETING, SHORING, AND BRACING

A. Where wood is used for sheeting, shoring and sheeting, use green, rough cut hardwood (i.e. oak or hickory). Use lumber with a minimum thickness of 2 inches for all planking, sheeting and foundation lumber. Assume responsibility for the design and installation of all wood sheeting unless wood shoring is indicated on the plans.

B. Where steel sheet piling is used for sheeting, shoring and bracing, use steel sheet piling of a continuous interlock design. Use sheet piling m in good condition and of a water tight interlocking connection, which will retard the infiltration of ground water. Provide cofferdams when constructing wet wells at pump station sites. Assume responsibility for and pay all costs for the for the design and installation of all cofferdams as a part of the WORK.

C. Where trench boxes and shields are used for sheeting, shoring and bracing, use boxes in in good, sound condition which comply with all applicable OSHA requirements. Install, use, and remove of trench shields or accordance with the manufacturer's recommendations and in such a manner as to prevent damage to adjacent embankments, utilities, pavements, or other improvements. Assume responsibility and pay all costs for the design and installation of all trench boxes or shields as a part of the WORK. Depict the use of such implements within the CONTRACTOR's sheeting, shoring and bracing plan.

2.10 SHEET PILES

A. **Sheeting, Shoring, and Bracing:** Where neither permanent nor temporary sheeting is shown on the Drawings, but is required for the CONTRACTOR to meet its obligations for excavation safety. Assume full and complete responsibility for the design and details of the sheeting. Use new or used sheeting with or without protective coatings. Remove unless otherwise approved by the ENGINEER.

PART 3 -- EXECUTION

3.1 GENERAL

A. Except when specifically provided to the contrary, excavation includes the removal of materials, including obstructions that would interfere with the proper execution and completion of the WORK. Conform to the lines and grades indicated or ordered. Unless otherwise indicated, the strip the entire site of vegetation and debris and grub the entire site. Remove such material from the Site prior to performing any excavation or placing any fill.

3.2 SHEETING, SHORING, AND BRACING

A. Furnish, place, and maintain supports and shoring that may be required for the sides of all excavations regardless of type. Assume full responsibility for the stability and safety of all excavations, regardless of type.

B. Slope or otherwise support excavations in a safe manner in accordance with applicable State safety requirements and the requirements of *OSHA Safety and Health Standards for Construction (29CFR1926*). In accordance with *OSHA Safety and Health Standards for Construction,* excavations less than five (5) feet in depth will not require protective systems if a competent person under the employ of the CONTRACTOR has examined the excavation and found no danger of a potential cave in.

C. Confine limits of all excavations to the right – of – way. Do not allow the limit of any excavation, shoring implement, excavation slopes, or excavation steps to encroach upon private property without a written agreement with the property owner.

D. The use of horizontal strutting below the barrel of a pipe or structure or the use of a pipe as support for trench bracing will not be permitted.

3.3 EXCLUSION OF WATER

A. Remove and exclude water, including storm water, groundwater, irrigation water, and wastewater, from excavations. Use dewatering wells, well-points, sump pumps, or other means remove water and continuously maintain groundwater at a level at least 2 feet below the bottom of excavations before the excavation WORK begins at each location. Remove and exclude water from excavations until backfilling is complete and field soils testing has been completed.

3.4 OVER – EXCAVATION

A. **Indicated:** Where areas are indicated to be over-excavated, excavate to the depth indicated, and install backfill to the grade indicated.

B. **Not Indicated:** When ordered to over-excavate areas deeper and/or wider than required by the Contract Documents, over-excavate to the dimensions ordered and backfill to the indicated grade.

C. **Neither Indicated nor Ordered:** Backfill any over-excavation carried below the grade ordered or indicated to the required grade with granular material or non – plastic embankment as part of the WORK.

3.5 DISPOSAL OF EXCESS MATERIAL

A. Unless otherwise indicated, take possession of and dispose of excess material. Assume full responsibility for the removal and disposal of excess excavated material. Dispose of material of an approved on-Site disposal area or off-Site at a location arranged by the CONTRACTOR in accordance with laws and regulations regarding disposal of such material.

3.6 EMBANKMENTS AND HEADERS

A. Where indicated on the drawings, or where directed by the ENGINEER, place and compact embankment and headers as specified herein.

B. Prior to beginning excavation, grading or embankment operations in an area, complete all necessary clearing and grubbing in that area. Prior to any embankment operations in an area, cut all corresponding roadside ditches to facilitate drainage in that area. Do not place or spread embankment materials on Portland cement concrete or asphaltic concrete pavements. Do not damage pavement surfaces, edges, and joints during embankment operations. Repair surfaces damaged by such operations as directed by the ENGINEER.

C. Ensure that final excavation and embankment slope lines are be uniform in appearance. Take measurements as necessary to assure that the elevations at the top, bottom, and intermediate breaks in the slope are such that a minimum acceptable slope is achieved. Ensure that all sloped are straight without valleys or humps, as determined by visual inspection.

D. Construct embankments of select soils and place soils in uniform layers not exceeding 12 inches of uncompacted thickness. Place each layer for the full width of embankment, blended as necessary to obtain a uniform material, brought to a uniform moisture content, and compacted by approved methods to a minimum of 95.0 percent of maximum dry density before the next layer is placed. Maximum dry density will be determined in accordance with *DOTD TR 415* or *TR 418* and percent in-place density in accordance with *DOTD TR 401*. If base course or roadway is to be constructed on the embankment, compact the embankment to a density such that the required base course compaction can be met. Ensure that the moisture content at the time of compaction, tested in accordance with *DOTD TR 403,* is within a range of ±2.0 percent of optimum moisture established in accordance with *DOTD TR 415* or *TR 418* or reprocess and re – compact the lifts until these requirements are met. Conduct operations such as to prevent lamination between lifts. Correct laminations between lifts prior to placing additional lifts. Ensure that surfaces of excavated areas and embankments and uniform. Do not disturb material outside construction limits.

E. Assume full responsibility for the stability of embankments until final acceptance. Construction activities, which may lead to subsequent embankment damage will not be permitted.

F. When embankments are constructed on a surface sloping more than 6:1 from the horizontal, cut the slope of the ground on which the embankment is to be placed into steps, as directed, before fill is placed.

G. When an embankment is to be constructed to a height of less than 5 feet, remove heavy sod and objectionable vegetation from the area on which the embankment is to be placed. Scarify the area to a depth of approximately 9 inches. Recompact area to at least 95.0 percent of maximum dry density. Maximum dry density will be determined in accordance with *DOTD TR 415* or *TR 418* and percent in-place density in accordance with *DOTD TR 401*. When height of fill is 5 feet or more, removal of sod will not be required but disk the area on which embankment is to be placed to the satisfaction of the ENGINEER and recompacted before construction of embankment.

H. When embankment material is to be deposited only on one side of structures or culvert head walls, do not compact the area immediately adjacent to the structure to the extent that it will cause excessive pressure against the structure. Do not place fill adjacent to the end bent of a bridge higher than the top of the substructure until the superstructure is in place. When the embankment is to be deposited both sides of a concrete wall or similar structure, conduct operations so that the embankment is always at approximately the same elevation on both sides of the structure. Backfill structures as specified herein.

I. When embankments are constructed in lakes, streams, swamps or other unstable areas and unstable material cannot be removed or the area drained, the requirement for placing material in layers as outlined above may be waived. When this requirement is waived, place the embankment by end dump or other approved methods to an elevation where normal construction methods can begin. Construct embankments placed above this elevation in layers as specified above. When a wave of unsuitable material is forced up in front of the end dumping operation, take possession of the material and remove and dispose of it. Do not allow such material to be trapped and be incorporated in the embankment except as part of plastic soil for slopes.

J. **Cut Area Prepration:** If base course or roadway is to be constructed on the cut area, ensure that the density of the embankment is such that the required base course compaction can be met. When unstable soils are encountered, the ENGINEER will determine the limits to be undercut. Excavate to a stable foundation or to the depth required by the ENGINEER and backfill to existing grade. When stable foundation cannot be reached, “bridge in” the embankment materials and construct the remaining embankment to grade as specified.

K. **Plastic Soil Blanket:** The outside layer of each roadway embankment and header will consist of a plastic soil blanket as specified. Place plastic soil blanket in a timely manner to prevent erosion.

3.7 DRAINAGE AND UTILITY PIPELINE EXCAVATION

A. **General:** Unless otherwise indicated or ordered, install pipelines and utilities within open-cut trenches with minimum widths as indicated.

B. **Trench Bottom**: Except where pipe bedding is required, excavate the bottom of the trench uniformly to the grade of the bottom of the pipe. Make excavations for pipe bells and welding as required. Where pipe bedding is required, the bottom of the trench uniformly to the grade of the bottom of the pipe bedding.

C. **Open Trench**: The maximum amount of open trench permitted in any one location is 500-feet or the length necessary to accommodate the amount of pipe installed in a

single Day, whichever is greater. Fully backfill trenches at the end of each day or, in lieu thereof, cover trenches by heavy steel plates adequately braced and capable of supporting vehicular traffic in those locations where it is impractical to backfill at the end of each Day. These requirements for backfilling or use of steel plate will be waived in cases where the trench is located further than 100-feet from any traveled roadway or occupied structure. In such cases, however, provide and maintain barricades and warning lights meeting appropriate safety requirements.

D. Where pipelines are to be installed in embankments, fills, or structure backfills, construct the fill to a level at least one-foot above the top of the pipe before the trench is excavated. Upon completion of the embankment or structural backfill, excavate a trench conforming to the appropriate detail and install the pipe.

E. Where moveable trench shield is used during excavation operations, excavate the trench width slightly wider than the shield so that the shield is free to be lifted and then moved horizontally without binding against the trench sidewalls and causing sloughing or caving of the trench walls.

F. If a moveable trench shield is used during excavation, pipe installation, and backfill operations, move the shield by lifting the shield free of the trench bottom or backfill and then moving the shield horizontally. Do not drag trench shields along the trench causing damage or displacement to the trench sidewalls, the pipe, or the bedding and backfill.

3.8 DRAINAGE AND UTILITY PIPELINE BACKFILL AND COMPACTION

A. Prior to backfilling, remove and reinstall or replace pipes found to be damaged or out of alignment or grade as directed by the ENGINEER.

B. **Placement and Compaction:**

1. If the top of pipe is even with or below the top of the trench, bring up backfill material up evenly on both sides of pipe for its full length to an elevation of 12 inches (300 mm) above the top of pipe or to subgrade if less than 12 inches (300 mm) or to natural ground elevation, whichever is greater.

2. When the top of the pipe is above the top of the trench, bring up backfill material evenly on both sides of pipe for its full length to 12 inches (300 mm) above the top of pipe or to subgrade if less than 12 inches (300 mm). Use backfill material in the trench and above the top of the trench for a distance on each side of the pipe equal to the horizontal outside diameter for corrugated metal or plastic pipe and 18 inches (450 mm) for concrete pipe, and to 12 inches (300 mm) above the top of pipe or to subgrade if less than 12 inches (300 mm).

C. **Backfill Methods**: Compaction of backfill for drainage pipe as indicated below. Compaction by flooding will not be allowed unless authorized by the ENGINEER.

1. **Selected Soils:** Place at or near optimum moisture content determined in accordance with *DOTD TR 415* or *TR 418* in layers not exceeding 8 inches (200 mm) compacted thickness. Thoroughly compact backfill mateiral under the haunches of the pipe. Compact each layer by approved methods to at least 95 percent of maximum dry density prior to placement of a subsequent layer.

2. **Granular Material:** Place backfill; at or near optimum moisture content determined in accordance with *DOTD TR 415* or *TR 418*. Thoroughly compact material under the haunches of the pipe and then compact material in layers not exceeding 12 inches compacted thickness. Compact each layer by approved methods to at least

95 percent of maximum dry density prior to placement of a subsequent layer. Cover exposed slopes at the pipe ends by at least 12 inches (300 mm) compacted thickness of plastic soil blanket.

3. **Flowable Fill:** Install flowable fill in accordance with Section 02710 – Flowable Fill.

4. **Stone or Recycled Portland Cement Concrete:** Place backill at or near optimum moisture content determined in accordance with *DOTD TR 415* or *TR 418*. Thoroughly compact backfill material under the pipe haunches and then compact in layers not exceeding 8 inches (200 mm) compacted thickness. With approval of the ENGINEER, layer thickness may be increased to 12 inches (300 mm) with verification of satisfactory installation and performance. Compact each layer by approved methods to at least 95 percent of maximum dry density prior to placement of a subsequent layer. Control placement and compaction operations so as not to damage protective coatings on metal pipes. Repair damaged coatings at no additional cost to the OWNER.

3.9 BEDDING MATERIAL

A. **Placement of Bedding:** Unless otherwise noted on the drawings, place geotextile material in accordance with plan details prior to placing bedding material. Take care to prevent damage to geotextile fabric during placement of bedding material. Place materials in lifts not exceeding 12 inches. Shape the layers and uniformly compact.

B. **Compaction Requirements:** Compact material to 75% relative density as determined by *ASTM D 4253* and *D 4254*. In place density will be determined in accordance with *DOTD TR 401.*

C. Adjacent rolls of fabric will be overlapped or sewn. When rolls are overlapped, overlap a minimum of 18 inches, including the ends of the rolls. Place the top layer of the fabric parallel with adjacent rolls and in the direction of bedding materials placement. When rolls are sewn, join adjacent rolls by sewing with polyester, or Kevlar thread. Employ the "J" seam or "Butterfly" seam for field sewing with the two pieces of geotextile fabric mated together, turned in order to sew through 4 layers of fabric and sewn with 2 rows of Type 401, two-threaded locking chain stitch. Factory seams other than specified may be submitted to the ENGINEER for approval. When the ground is covered with water or supersaturated soil, sewing of the fabric will be required.

D. Remove and replace damaged fabric with new fabric or cover with a second layer of fabric extending 2 feet in each direction from the damaged area.

3.10 EXCAVATION AND BACKFILL FOR STRUCTURES

A. Except where otherwise indicated for a particular structure or where ordered by the ENGINEER, carry the excaation to an elevation 6-inches below the bottom of the footing or slab and brought back to grade with compacted materials acceptable for placement beneath structures. Where indicated or ordered, over – excavate beneath structures. When such over-excavation is indicated, perform both over-excavation and subsequent backfill to the required grade.

B. Backfill excavations with pumped river sand compacted in lifts. Place and spread backfill material evenly in approximately horizontal layers. Moisten or aerate each layer necessary. Unless otherwise approved by the ENGINEER, do not allow any layer to exceed 6-inches of compacted thickness. Compact backfill to a minimum of 95 percent of maximum dry density. Use equipment that is consistently capable of achieving the

required degree of compaction and compact each layer over its entire area while the material is at the required moisture content.

C. Do not deposit material on reservoir and structure roofs sooner than 30 Days after the concrete roof slab has been placed. Do not use equipment weighing more than 10,000 pounds when loaded on a roof.

D. Do not use flooding, ponding, and jetting for fill on roofs, backfill around structures, backfill around reservoir walls, for final backfill materials, or aggregate base materials.

E. Do not use equipment weighing more than 10,000 pounds closer to walls than a horizontal distance equal to the vertical depth of the fill above undisturbed soil at that time. Use hand operated power compaction equipment where use of heavier equipment is impractical or restricted due to weight limitations.

3.11 GEOTEXTILE FABRIC

A. Unless noted otherwise, on the drawings or elsewhere in the Contract Documents, utilize geotextile fabric as indicated in the table below:

Application		**Use Geotextile Class**
Drainage or Sewerage	Underdrains	A, B, C, or D
	Pipe and Precast Manhole Joints	A, B, C, or D
	Weepholes	A, B, C, or D
	Bedding Fabric	B, C, or D
	Geocomposite Drainage Systems	B, C, or D
Stabilization	Bulkheads	C or D
	Flexible Revetments	C or D
	Rip Rap	D
	Railroad Crossings	D
	Base Course	D
	Subgrade Layer	D
	Soil Stabilization	C, D, or S
Paving	Paving Fabric	B or C
Silt Fencing	Self Supported Silt Fencing	F

	Wire Supported Silt Fencing	G

B. Keep rolls of geotextile covered and protected from ultraviolet degradation at all times until use. Cover geotextile fabric that has been installed with embankment within 7 calendar days. When ultraviolet damage occurs, remove and replace the geotextile. Place fabric at the locations shown on the plans or as directed. Overlap or sew adjacent rolls of geotextile fabric. When rolls are overlapped, provide an overlap of a minimum of 18 inches (450 mm), or as specified in the plans, including the ends of the rolls. Place the top layer of the geotextile fabric parallel with adjacent rolls and in the direction of embankment placement. When rolls are sewn, join adjacent rolls by sewing with polyester or Kevlar thread. Employ the "J" seam or "Butterfly" seam for field sewing with the two pieces of geotextile fabric mated together, turned in order to sew through 4 layers of fabric and sewn with 2 rows of Type 401, two-thread chain stitch. Factory seams other than specified may be submitted to the ENGINEER for approval. Where the ground is covered with water or soil is saturated, sew the geotextile fabric.

C. Place geotextile fabric as smooth as possible with no wrinkles or folds, except in curved road sections. For curved road sections, fold the geotextile fabric to accommodate the curve. Fold in the direction of construction and pinned or stapled. Fill and compact ruts that occur during construction prior to placement of geotextile fabric.

D. Remove and replace damaged geotextile fabric with new geotextile fabric or covered with a second layer of geotextile fabric extending 2 feet in each direction from the damaged area

3.12 TOPSOIL

A. Scarify areas to receive topsoil as directed. Spread topsoil uniformly over the areas to a depth of 6 inches and roll to a uniform surface with a cultipacker or other suitable equipment.

3.13 GEOGRID

A. Place geogrid in continuous sheets parallel to the roadway or pipeline centerline. Ensure that geogrid sections do not separate during construction.

B. Cut geogrid to ensure that placement is maintained parallel to the centerline of the roadway or the pipeline.

C. Do not allow tracked equipment to operate directly on the geogrid. Remove and replace damaged geogrid with new geogrid or cover geogrid with new geogrid extending three (3) feet in each direction.

- END OF SECTION –

SECTION 02201 - SITE PREPARATION

PART 1 -- GENERAL

1.1 THE REQUIREMENT

A. Provide all WORK necessary for CONTRACTOR's initial move onto the Site; inspection of the Site, clearing, grubbing and stripping; and development of construction site access.

1.2 REFERENCE STANDARDS

A. Commercial Standards:

AAN	American Association of Nurserymen

B. Louisiana Department of Transportation and Development

Quality Assurance Specifications for Embankment and Base Course

1.3 CONTRACTOR SUBMITTALS, SAMPLING, AND TESTING

A. Provide submittals, samples for testing, and testing of materials in accordance with Section 01010 – Summary of the Work and General Requirements and Section 01030 – Submittals, Sampling and Testing Plan.

1.4 QUALITY CONTROL

A. NOT USED

1.5 DELIVERY, STORAGE, AND HANDLING

A. NOT USED

PART 2 -- PRODUCTS

2.1 BACKFILL

A. Use material in accordance with Section 02200 – Earthwork.

PART 3 -- EXECUTION

3.1 SITE INSPECTION

A. Prior to moving onto the Site, inspect the Site conditions and review maps of the existing site, existing utilities, and facilities or other items delineating the OWNER's property and right-of-way lines.

3.2 PRIMARY CONSTRUCTION SITE ACCESS

A. Develop any necessary access to the Site, including access barriers to prohibit entry of unauthorized persons.

B. **Utility Interference:** Where existing utilities interfere with the WORK, notify the utility owner and the ENGINEER before proceeding in accordance with the General Conditions.

3.3 CLEARING AND GRUBBING

A. Clear, grub, and remove vegetation and debris within the limits of the right-of-way and easement areas, except such items that are designated to remain. Cut trees, logs, brush, stumps and debris; excavate and remove stumps, roots, submerged logs, snags, and other vegetative or objectionable material; dispose removed material in accordance with local, state, and Federal requirements; and clean the area.

B. Adhere to the quality assurance requirements specified in the latest edition of the LDOTD publication titled Application of Quality Assurance Specifications for Embankment and Base Course.

C. Implement and maintain temporary erosion control measures in accordance with Section 02204 – Temporary Environmental Controls prior to clearing and grubbing.

D. Preserve the items to remain as designated by the engineer. Do not store equipment, materials, and supplies in proximity of items designated to remain. Remove trees and other items without damaging items marked to remain. Repair damage to bark, trunks, limbs, or roots of vegetation marked to remain using horticultural and tree surgery practices published by the American Association of Nurserymen (AAN) under the supervision of a licensed landscape arborist at no cost to the department. Do not fell trees outside of the right-of-way. Assume full responsibility for damage outside the right-of-way caused by the contractor's operations.

E. Clear and grub to the limits of the right-of-way, or to the construction limits, whichever is greater, unless otherwise designated on the plans.

F. When fencing or utility relocation is required, clear and grub an area 10 foot wide, adjacent to and inside the right-of-way line. Mow when required by the engineer.

G. Some loose limbs and roots approximately 2 inch x 2 foot and smaller may be allowed to remain; however, excessive amounts will not be allowed.

H. Do not use explosives.

I. Backfill stump holes and other holes left from clearing and grubbing by blading the area and backfilling with existing materials or pumped river sand as specified in Section 02200 – Earthwork and compact to a condition similar to surrounding soils.

J. **Burning:** Burning of debris is not permitted.

K. **Merchantable Timber:** Merchantable timber in the area to be cleared, not removed from the right of-way prior to the beginning date stipulated in the Notice to Proceed, becomes the property of the contractor.

L. Remove hanging branches and unsound or unsightly branches on trees or shrubs designated to remain as directed. Trim branches of trees extending over the roadbed to a height of 20 foot above the pavement in accordance with accepted horticultural and tree surgery practices published by *AAN.*

- END OF SECTION –

SECTION 02202 – DEMOLITION AND REMOVAL OF STRUCTURES AND OBSTRUCTIONS

PART 1 -- GENERAL

1.1 THE REQUIREMENT

A. Demolish and remove facilities as indicated. Remove and/or relocate structures and obstructions as indicated, all in accordance with the Contract Documents.

B. Carefully coordinate the WORK in areas where existing facilities are interconnected with new facilities and where existing facilities remain operational. The WORK as indicated is not all inclusive, and the CONTRACTOR will be responsible to perform the reconstruction indicated plus that which can be reasonably inferred from the Contract Documents as necessary to complete the Project. The Specifications and Drawings identify the major facilities that are to be demolished and reconstructed, but auxiliary utilities are not necessarily shown.

C. While demolition and reconstruction are being performed, provide adequate access for the continued operation and maintenance of equipment and other facilities to remain. Erect and maintain fences, warning signs, barricades, and other devices around the reconstruction as required for the protection of the CONTRACTOR's employees and the OWNER's personnel. Remove such protection when reconstruction activities are complete, or as work progresses, or when directed by the ENGINEER.

1.2 REFERENCE STANDARDS

A. *Code of Federal Regulations*

49 CFR, Parts 172-180 *Regulations for Hazardous Materials*

B. *Louisiana Administrative Code (LAC)*

LAC Title 33, Part V, Chapter 38, Section 3813

LAC Title 33, Part V, Chapter 38

C. *Louisiana Department of Transportation and Development (LDOTD)*

Water Well Rules, Regulations, and Standards, State of Louisiana

D. *Louisiana Department of Environmental Quality (LDEQ)*

UST Regulations *Regulations for Underground Storage Tanks*

1.3 CONTRACTOR SUBMITTALS, SAMPLING, AND TESTING

A. Provide submittals, samples for testing, and testing of materials in accordance with Section 01010 – Summary of the Work and General Requirements and Section 01030 – Submittals, Sampling and Testing Plan.

PART 2 -- PRODUCTS - **NOT USED**

PART 3 -- EXECUTION

3.1 **GENERAL**

A. Coordinate demolition and reconstruction WORK with the OWNER and ENGINEER. Unless otherwise indicated, assume full responsibility for the sequence of activities. Perform demolition and relocation WORK in accordance with applicable safety rules and regulations.

B. Take precautions to avoid damage to adjacent facilities and to limit the WORK activities to the extent indicated. If reconstruction beyond the scope indicated is required, then obtain approval from the ENGINEER prior to commencing.

C. e equipment to its original operating condition at no additional cost to the OWNER.

3.2 PROTECTION OF EXISTING FACILITIES

A. Before beginning any reconstruction, carefully survey the existing facilities and examine the Specifications and Drawings to determine the extent of reconstruction and coordination with the WORK. Protect and maintain existing facilities not subject to reconstruction. Repair existing facilities damaged by demolition and removal to the previous condition or replace with new facilities approved by the OWNER and ENGINEER.

B. Afford persons and equipment safe passages around areas of demolition.

C. Do not overload existing or temporary structural elements. Provide shoring, bracing, or adding new supports as may be required for adequate structural support as a result of WORK performed under this Section. Remove temporary protection when the WORK is complete or when so authorized by the ENGINEER.

D. Carefully consider bearing loads and capacities before placement of equipment and material on Site. In the event of any questions as to whether an area to be loaded has adequate bearing capacity, consult with the ENGINEER prior to the placement of such equipment or material.

3.3 DEMOLITION AND REMOVAL OF STRUCTURES AND OBSTRUCTIONS

A. **Structures**:

1. Unsalvageable materials in a structure designated for removal become the property of the CONTRACTOR. Remove and dispose of such material. Demolish and remove appurtenances forming a part of a structure to be demolished, whether integral or not integral to the structure.

B. **Pavement, Base Courses, Walks, and Curbs**: Dispose of pavements, stabilized or treated base courses, walks, curbs, and gutters, designated for removal as shown on the plans and as directed.

C. **Pipe**: Remove and store pipe that is to be re-laid so that there will be no loss or undue damage before relaying. Replace sections lost from storage or unduly damaged at no additional cost to the OWNER.

3.4 REMOVING ENVIRONMENTALLY SENSITIVE MATERIALS

A. When removal or remediation of any environmentally sensitive or contaminated sites is required during construction, conduct operations in compliance with applicable laws and regulations. If failure to follow applicable laws and regulations subsequently causes or increases harm or damage to the environment, pay all resulting fines and clean-up costs.

B. Asbestos containing materials in structures that are removed or relocated without disturbing asbestos will not be abated. Provide a Certificate of Release to the ENGINEER.

C. **Non Friable Asbestos:** When a structure contains non-friable asbestos, carefully remove the asbestos without excessive breakage or crushing before demolition or renovation of the structure. Dispose of the non-friable asbestos material at an approved industrial landfill.

D. **Friable Asbestos:** When a structure contains friable asbestos, request that DEQ provide a confirmation letter with an Asbestos Disposal Verification Form (ADVF). Complete the ADVF within 90 calendar days from the date of issue. Only use contractors or subcontractors certified by DEQ as Asbestos Abatement Entities remove friable asbestos from structures. Remove the asbestos before structure demolition or renovation. Perform friable asbestos removal, handling, and disposal in accordance with the latest requirements for asbestos abatement of the DEQ Air Quality Division. Maintain, and furnish to the engineer within 21 calendar days, Chain of Custody verification records for the friable asbestos from the work site to the disposal site. These records will become part of the permanent project records.

E. **Contaminated Soils:** Excavate soil in areas of underground fuel tanks or other areas contaminated with petroleum products or other identified toxic materials at levels above the regulatory limits and is nonprotective of groundwater as shown on the plans or as directed. Determination requirements for groundwater protection through the use of the Synthetic Precipitation Leachate Procedure (SPLP) or as directed by the ENGINEER. Remove the overburden above the contaminated soil to the dimensions shown on the plans or as directed. Also, excavate the contaminated soil at the locations shown on the plans or as directed. Excavate contaminated soil determined to be protective of groundwater, through the use of the SPLP place in the roadbed when the soil is determined to be “suitable soil” by the engineer, and when the volume of soil is within quantities specified on the plans. No additional cover of the contaminated soil, other than the specified paved surfaces courses, will be required in the roadbed. Place all remaining contaminated soil determined to be protective of groundwater, but not used in the roadbed, in other embankment areas within the limits of the project. Cover contaminated soil placed in other embankment areas with 2 feet of compacted soil. Maintain final grade in accordance with the plans. Load the contaminated soil determined not to be protective of groundwater into approved hauling vehicles and dispose of in a site approved by the DEQ. Furnish the engineer, within 21 calendar days, Chain of Custody verification records for the contaminated soil. The ENGINEER will verify that all contaminated soil has been removed. While the excavation is open, construct and maintain a soil berm around the excavation to prevent surface water runoff from entering the excavation. The removed overburden may be used to construct the berm and backfill the excavation. Removal and disposal of contaminated soils will be in accordance with all local, state, and federal laws and regulations.

F. **Contaminated Fluids:** Remove and dispose of contaminated fluid, in underground fuel tanks, in areas of underground fuel tanks, or other areas as shown on the plans or as

directed. The Department will determine the quantity of contaminated fluid to be removed. Pump the contaminated fluid into approved hauling vehicles. Remove contaminated fluid from underground fuel tanks before tank removal. Dispose or recycle of contaminated fluid in a site approved by the Department of Environmental Quality. Furnish the engineer, within 21 calendar days, Chain of Custody verification records for the contaminated fluid. The Department will verify the removal of the contaminated fluid. Removal and disposal of contaminated fluids will be in accordance with all local, state, and federal laws and regulations.

G. **Paint Containing Lead or Other Hazardous Materials:** Remove steel members of structures protected by paint containing lead or other hazardous materials as shown on the plans or as discovered in the field and prepare for transport in accordance with applicable laws and regulations. Prior to removal, transport, treatment, or disposal of any steel members, submit the following to the engineer: 1. Plan of removal or treatment of steel members. 2. Plan for transport of steel members and any hazardous materials. 3. Name and address of the licensed recycling center. Deliver such steel members to a licensed recycling center capable of processing steel members coated with paint identified as hazardous by the Resource Conservation and Recovery Act (RCRA). The DOTD or the Owner will be the Generator and obtain the generator number. The contractor will be responsible for obtaining an approved disposal site, arranging for transporting the material and/all testing required. The manifest for transportation will have the DOTD Generator number on it and should be signed by the contractor, DOTD Inspector, and the Disposal Operator with copies to each upon completion. Unless otherwise directed or shown on the plans, the contractor will be allowed to retain any steel member once the lead paint has been removed and disposed of prior to steel leaving the jobsite in accordance with procedure above at no cost to the Department. Transport all steel members or hazardous material in accordance with all federal, state, and local laws. Provide Certificates of Disposal, Chain of Custody forms, or other applicable documents within 21 calendar days following each shipment

H. **Treated Timber:** Remove creosoted and other treated timber or lumber shown on the plans or discovered in the field; and prepare for transport by methods approved by the Department. Dispose of all materials that are not designated to be salvaged by the Department or salvaged by the contractor in an appropriate landfill. Provide Certificates of Disposal, Chain of Custody forms, or other applicable documents within 21 calendar days following each shipment.

I. **Universal Wastes:** Universal wastes are hazardous wastes defined in LAC Title 33, Part V, Chapter 38, Section 3813 to include batteries, pesticides, thermostats, lamps and antifreeze. Remove universal wastes, prepare for transport, and dispose of as specified in LAC Title 33, Part V, Chapter 38 and herein. Inform all employees who handle universal wastes of the proper handling and emergency procedures appropriate to the type of waste.

J. **Other Regulated Materials:** Items for removal under this subsection are defined as any material not considered in the above subsections and may be disposed of as a solid waste in the appropriate solid waste landfill. Such materials may include asphalt shingles, noninfectious medical waste, etc. not covered in other items

- END OF SECTION -

SECTION 02204 - TEMPORARY ENVIRONMENTAL CONTROLS

PART 1 -- GENERAL

1.1 THE REQUIREMENT

A. Comply with federal, state, and local laws and regulations controlling pollution of the environment, including air, water, and noise.

B. Prevent pollution of waters and wetlands with fuels, oils, asphalts, chemicals, wastewater, chlorinated or chloraminated water, or other harmful materials.

1.2 REFERENCE STANDARDS

A. Louisiana Department of Environmental Quality (LDEQ)

LAR 100000	Master General Permit for Discharges of Storm Water from Construction Activities – Five Acres or More
LAR 200000	Storm Water General Permit for Small Construction Activities

B. Occupational Safety Hazard Administration (OSHA)

Part 1926	Safety and Health Regulations for Construction

C. United States Environmental Protection Agency (US EPA)

Storm Water Management for Construction Activities

1.3 CONTRACTOR SUBMITTALS

A. Provide submittals, samples for testing, and testing of materials in accordance with Section 01010 – General Requirements and Section 01030 – Submittals, Sampling and Testing Plan.

1.4 DUST ABATEMENT

A. Prevent operations from producing dust in amounts damaging to property, cultivated vegetation, and domestic animals. Prevent operations from producing dust causing a nuisance to persons living in or occupying buildings in the vicinity of the Site. Assume complete responsibility for any damage resulting from dust originating from its operations. Continue dust abatement measures until relieved of further responsibility by the ENGINEER.

B. **Storage Piles**: Enclose, cover, water (as needed), or apply non-toxic soil binders according to manufacturer's specifications on material piles (i.e. gravel, sand, dirt) with a silt content of 5 percent or greater.

C. **Active Areas of Site**: Water active construction areas and unpaved roads as needed and as directed by ENGINEER.

D. **Inactive Areas of Site**: Apply non-toxic soil stabilizers according to manufacturer's specifications to inactive construction areas, or water as needed to maintain adequate dust control.

E. **Vehicle Loads**: Cover or maintain at least 2-feet of freeboard vertical distance between the top of the load and the top of the trailer sides on trucks hauling dirt, sand, soil, or other loose materials off of the Site.

F. **Roads**: Prevent construction materials, including sand, soils, from accumulating on public and private roads.

1. When there is visible track-out onto a paved public road, install wheel washers where the vehicles exit and enter onto the paved roads and wash the undercarriage of trucks and any equipment leaving the Site on each trip.

2. Sweep the paved street at the end of each shift with a water spray pick-up broom-type street sweeper as necessary or as directed.

G. **Vehicle Speeds**: Reduce vehicle speeds as required for control of dust if watering of unpaved roads is not sufficient to control dust.

1.5 SEDIMENTATION ABATEMENT FOR WORK DISTURBING LESS THAN ONE ACRE

A. For work disturbing one acre or less, no formal Storm Water Pollution Prevention Plan is required. Collect, store, haul, and dispose of spoil, silt, and waste materials in compliance with federal, state, and local rules and regulations and the Contract Documents.

B. For work disturbing one acre or less, Storm Water Control Measures (SCMs) must be in place. There will be no Notice of Intent (NOI) required. Complete inspection reports and submit copies to ENGINEER.

C. Install and maintain erosion and sediment control measures, such as swales, grade stabilization structures, berms, dikes, waterways, filter fabric fences, and sediment basins.

D. Install and maintain filter fabric barrier systems, if used, in such a manner that surface runoff will percolate through the system in sheet flow fashion and allow sediment to be retained and accumulated.

E. Remove and dispose of sediment deposits at the designated spoil area. If a spoil area is not indicated, dispose of sediment off-Site at a legally permitted disposal facility. Sediment to be placed at the spoil area should be spread evenly, compacted, and stabilized. Do not allow sediment to flush into a stream, drainage structure, or drainage way.

F. Maintain erosion and sediment control measures until final acceptance or until directed by the ENGINEER to remove it.

1.6 STORMWATER POLLUTION PREVENTION PLAN (SWPPP) AND SEDIMENTATION ABATEMENT FOR WORK DISTURBING MORE THAN ONE ACRE

A. Prepare, implement, and maintain a Storm Water Pollution Prevention Plan (SWPPP), for work disturbing one acre or greater. Within the plan, describe in specific details the CONTRACTOR's program to prevent contamination of the storm water collection system for this project.

B. A suggested Template and Sample SWPPP Inspection Report, as well as other valuable information can be found at EPA's website: http://cfpub.epa.gov/npdes/stormwaterlswppp.cfm.

C. Comprise the plan of all relevant components specified in the U.S. Environmental Protection Agency document entitled, “Storm Water Management for Construction Activities”.

D. Implement, maintain, and inspect all erosion and sediment controls identified in the SWPPP. Address both common construction activities and extraordinary events. Remove all temporary SCMs, such as silt fences, catch basin filters, wash areas, etc. at the end of construction.

E. Include Water Pollution Control Drawings (WPCD) in the SWPPP to illustrate the locations, applications, and deployment of the Storm Water Control Measures (SCMs) identified in the SWPPP. Include WPCD’s as an attachment to the SWPPP.

F. **Storm Water Control Measures (SCMs):** The Storm Water Control Measures (SCMs) are techniques, processes, activities, or structures used to reduce the pollutant content of a storm water or non-storm water discharge. SCMS may include simple, non-structural methods such as good housekeeping, staff training, and preventative maintenance. Additionally, SCMs may include structural modifications such as the installation of berms, canopies, or treatment control.

G. Comply with laws, rules, and regulations of the State of Louisiana and agencies of the United States Government prohibiting the pollution of lakes, wetlands, streams, or river waters from the dumping of contaminates, refuse, rubbish, or debris.

H. Submit copies of the SWPPP a minimum of 10 working days prior to beginning construction, to the ENGINEER. Update the SWPPP as necessary during the work to prevent contamination of the storm water collection system.

I. Before the start of work, train all employees and Subcontractors on the approved SWPPP and related WPCD. Provide the ENGINEER with written documentation of said training.

J. For work disturbing one to five acres, Storm Water Control Measures (SCMs) must be in place. Prepare SWPPP and post prominently on the job site. Post the LAR 200000 General Permit posted on the job site. No Notice of Intent (NOI) will be required. Complete all required reports and submit them to OWNER.

K. For work disturbing five acres or more, Storm Water Control Measures (SCMs) must be in place. The CONTRACTOR must have Notice of Intent (NOI) completed, sent to DEQ, and posted. Prepare a SWPPP and post prominently on the site. Have the LAR 100000 General Permit posted on site with DEQ permit number for specific site. Complete a Notice of Termination (NOT) upon completion of the WORK and submit it to LDEQ with a copy to the OWNER and ENGINEER.

1.7 RUBBISH CONTROL

A. Keep the Site and adjacent areas in a neat and clean condition and free from any accumulation of rubbish. Dispose of rubbish and waste materials of any nature and establish regular intervals of collection and disposal of such materials and waste. Keep haul roads free from dirt, rubbish, and unnecessary obstructions resulting from its operations. Dispose of rubbish and surplus materials be off the Site in accordance with local codes and ordinances governing locations and methods of disposal and in conformance with applicable safety laws and the particular requirements of Part 1926 of the OSHA Safety and Health Standards for Construction.

1.8 CHEMICALS

A. When chemicals are used for the WORK or furnished for facility operation, whether defoliant, soil sterilant, herbicide, pesticide, disinfectant, polymer, reactant, or of other classification, use or provide chemicals which show approval of either the U.S. Environmental Protection Agency or the U.S. Department of Agriculture. Use such chemicals and dispose of residues thereof in strict accordance with the printed instructions of the manufacturer.

PART 2 -- PRODUCTS (NOT USED)

PART 3 -- EXECUTION (NOT USED)

- END OF SECTION -

SECTION 02713 – TEMPORARY TRAFFIC CONTROL

PART 1 -- GENERAL

1.1 THE REQUIREMENT

A. Assume the full and sole responsibility for the design, development, and implementation of a temporary traffic control device plan for all phases and portions of the WORK. The traffic control device plan will provide for safe and expeditious movement of traffic and pedestrians through the area of construction.

B. Furnish, install, maintain, and remove temporary construction barricades, lights, signals, pavement markings and signs, and flaggers as indicated in his plan or as directed by the ENGINEER.

C. Furnish and install appropriate signs for special conditions as required or as directed.

D. Requirements for proper signs, barricades, barriers, channelizing devices, or other safety precautions promulgated by the CONTRACTOR's insurers will not be negated by these specifications.

E. Assign one or more authorized Traffic Control Supervisors (TCS) to provide traffic control management for the execution of the WORK. If more than one TCS is assigned, provide a weekly schedule identifying who will be in charge of providing traffic control management on a daily basis. If the CONTRACTOR utilizes a subcontractor to provide traffic control management, ensure that the subcontractor's TCS meet all requirements set forth herein.

1.2 REFERENCE STANDARDS

A. *American Traffic Safety Services Association (ATSSA)*

ATSSA	*Quality Guidelines for Temporary Traffic Control Devices and Features*

B. *ASTM International (ASTM):*

ASTM B209	*Standard Specification for Aluminum and Aluminum Alloy Sheet and Plate*
ASTM D4956	*Standard Specification for Retroreflective Sheeting for Traffic Control*

C. *Federal Highway Administration (FHWA):*

MUTCD	*Manual for Uniform Traffic Control Devices*

D. *Louisiana Department of Transportation and Development (LDOTD):*

AML	*Approved Materials List*
TTC-00 (C)	*Temporary Traffic Control General Notes*
TTC-00 (D)	*Layout for Placement of Road Work Next "XX" Miles and End Road Work Signs*
TTC-01	*Layout for Work Less than 15 Feet from the Traveled Way*

TTC-02	*Layout for Work Less than 15 Feet from the Traveled Way*
TTC-03	*Layout for Lane Closures on Two Lane Roads with Two Way Traffic Less Than 1600 Feet from Intersection*
TTC-04	*Layout for Lane Closures on Two Lane Roads with Two Way Traffic Greater Than 1600 Feet from Intersection*
TTC-05	*Layout for On - Site Diversion with Two Lane Traffic*
TTC-06	*Layout for Lane Closure on Four – Lane Undivided Highways*
TTC-07	*Layout for Lane Closure of Two Adjacent Lanes on Four – Lane Undivided Highways*
TTC-08	*Layout for Median Crossover on Divided Highways*
TTC-09	*Layout for One Lane Closure on Divided Highways*
TTC-10	*Layout for Lane and Sidewalk Closures in Urban Areas with Speed Limit Less than or Equal to 40 Miles per Hour*
TTC-11	*Layout for Lane Closure Using Temporary Barrier Rail on Divided Highways*
TTC-12	*Layout for Lane Closures Through Ramp Entrance and Exit Tapers*
TTC-13	*Layout for Lane Closure of Two Lanes on a Multi – Lane Highway*
TTC-14	*Layout for "Louisiana Left" on Interstate or Other Divided Highways*
TTC-15	*Layout for Short Duration Closure of Divided Highways*
TTC-16	*Layout for Temporary Road Closures*
TTC-17	*Layout for Moving Operations on Interstate or Other Multi – Lane Roadways*
TTC-18	*Layout for Moving Operations on Two – Way Two – Lane Roadways*
TTC-19	*Layout for Traffic Signal Installation and Maintenance at an Intersection*

E. *National Cooperative Highway Research Program (NCHRP)*

NCHRP 350	*Recommended Procedures for the Safety Performance Evaluation of Highway Features*

1.3 CONTRACTOR SUBMITTALS, SAMPLING, AND TESTING

A. Provide submittals, samples for testing, and testing of materials in accordance with Section 01010 – Summary of the Work and General Requirements and Section 01030 – Submittals, Sampling and Testing Plan.

1.4 QUALITY CONTROL

A. See Part 3 – Execution for Quality Control Requirements.

1.5 SAMPLING AND TESTING

A. At his discretion, the ENGINEER may sample materials which in his opinion may be questionable in quality or suspected of not meeting requirements specified herein.

PART 2 -- PRODUCTS

2.1 GENERAL

A. Use Category I, II, and III portable work zone traffic control devices that are crashworthy as determined by evaluations through NCHRP 350 for Test Level 3.

1. Category 1 Devices: Category I devices are low mass, single piece traffic cones, tubular markers, single piece drums and flexible delineators and are, by definition, considered crashworthy devices meeting NCHRP 350 Criteria for Test Level III. Drum and light combinations with Type A or C warning lights and fastener hardware consisting of vandal-resistant ½ inch diameter cadmium plated steel bolts and nuts used with 1 1/2 inch diameter by ¾ cup washers are included as Category I devices. In lieu of testing for crashworthiness, acceptance of Category I devices for compliance with NCHRP 350 will be allowed based upon self – certification by the supplier. Certify that the product is crashworthy in accordance with the evaluation criteria of NCHRP 350. Certification may be a one – page affidavit signed by the supplier, with supporting documentation kept on file to be furnished if requested.

2. Category 2 Devices: Category II devices include other low mass traffic control devices such as portable barricades, either with or without lights and/or signs, portable sign stands, portable vertical panel assemblies, and drums with lights not meeting the drum and light combination requirements for Category I. Individual crash testing is required for Category II devices. FHWA letters of approval wo;; serve as verification that these devices comply with the crash testing requirements of NCHRP Report 350, Test Level III. Provide to the ENGINEER a listing of all the Category II Devices to be used, including a reference to the FHWA Work Zone letter number for each device. Certify that each device has been crash tested and meets the NCHRP 350 requirements.

3. Category 3 Devices: NOT USED

2.2 BARRICADE WARNING LIGHTS

A. Provide Type A, B, and C barricade warning lights in compliance with the MUTCD. Use only approved products listed on the Louisiana Department of Transportation and Development Approved Materials List.

2.3 DRUMS, CONES, AND TUBULAR MARKERS

A. **Drums and Super Cones:** Use approved products listed on the LDOTD AML. Use devices with a design complying with LDOTD TTC-00 (C). Use reflective sheeting for drums and super cones that is a minimum of six inches wide and wich meets the requirements of ASTM D4956, Type III, and the Supplementary Requirement S2 for reboundable sheeting as specified in ASTM D4956. Use sheeting which is an approved material listed on the LDOTD AML.

B. **Traffic Cones:** Use traffic cones of a design comply with LDOTD TTC-00 (C). Use reflective sheeting for cone collars which is minimum of six inches wide and which meets the requirements of ASTM D4956, Type IV. Use sheeting for plastic traffic cones which is an approved material listed on the LDOTD AML. Use cones that are a minimum of 36 inches in height.

C. **Tubular Markers**: Use markers that comply with LDOTD TTC-00 (C). Use reflective sheeting for tubular markers meeting the requirements of ASTM D4956, Type III. Use sheeting for tubular markers which is an approved material listed on the LDOTD AML. Use tubular markers that are a minimum of 28 inches in height.

2.4 TEMPORARY SIGNS, VERTICAL PANELS & BARRICADES

A. **General:** Provide signs which comply with the MUTCD, the LDOTD Temporary Traffic Control Standards, and the CONTRACTOR's traffic control device plan. The design of temporary barricades and vertical panels must comply with LDOTD TTC – 00 (C). Only Type III barricades will be allowed. Use vertical panels complying with LDOTD TTC – 00 (C).

B. **Substrate:** Use either wood or rigid thermoplastic for barricade panels. Use aluminum, wood, or plastic for portable signs. Use be aluminum, wood, rigid thermoplastic, or aluminum clad low density polyethylene plastic for post mounted signs.

1. **Aluminum:** Use 0.080-inch thick sheeting complying with ASTM B209, Alloy 6061-T6 or Alloy 5052-H38.

2. **Wood:** Use plywood sheeting of exterior type grades High Density Overlay or Medium Density Overlay. Use panels that areminimum of 5/8-inch thick and which comply with the latest American Plywood Association specifications and which are identified with the APA edge mark or back stamp to verify inspection and testing. Prior to application of the reflective sheeting, sand the surface with steel wool or fine sandpaper and wiped thoroughly clean. Allow the panels to dry for eight (8) hours prior to the application of sheeting. Seal the cut edges of plywood panels with aluminum pigmented polyurethane sealer.

3. **Plastic:** When used, plastic substrate for barricade panels and signs must comply with the following:

   a. **Fiber Reinforced Vinyl (PVC):** Use a substrate of a nominal composite thickness of 0.04 inches and bonded to an approved retroreflective material by the manufacturer.

   b. **Rigid Thermoplastic**: Use rigid thermoplastic substrate consisting of either High Density Polyethylene (HDPE) or High Density Polycarbonate (HDPC). Use either hollow core HDPE or HDPC with a minimum thickness of 0.625-inch thick blow molded substrate. Use either 0.4000inch thick thin wall, fluted substrate or 0.625-inch thick blow molded substrate. Use substrate sufficiently rigid to maintain a flat face and which is capable of attachment to the sign mounting in such a manner as not to crush or otherwise deform the substrate. Reflectorized sheeting applied to rigid thermoplastic with its manufacturer's approval for use on the substrate.

   c. **Aluminum Clad Low Density Polyethylene (AL/LDPE) Plastic:** Use aluminum clad low density polyethylene plastic which is a minimum of 0.080-inch thick. Use sufficiently rigid substrate to maintain a flat face and which is capable of attachment to the sign mounting in such a manner as not to crush or

otherwise deform the substrate. Reflectorized sheeting applied to aluminum clad low density polyethylene must have its manufacturer's approval for use on the substrate.

C. **Reflective Sheeting:** Use an approved material listed on the LDOTD AML, and whic complies with the requirements of ASTM D4956, Type III. On the main line of freeways and expressways, fabricate the initial advance warning sign using sheeting complying with the requirements of ASTM D4956, Type X (Fluorescent Orange).

PART 3 -- EXECUTION

3.1 GENERAL

A. Ensure temporary signs, barricades, and related devices are in place when the WORK is in progress or when work is suspended. During such times that temporary signs, barricades, and related devices are not in place, maintain appropriate existing regulatory signs. Do not begin until signs, barricades, and other devices have been erected.

B. When signs to be furnished and erected by the CONTRACTOR are in place, ensure the CONTRACTOR's Traffic Control Supervisor (TCS) covers any standard signs that are in conflict with the temporary signs.

C. Coordinate with the ENGINEER in covering OWNER's signs or signs owned by other entities so that all appropriate signs remain in place.

D. Maintain temporary signts, supplemented by other signs as required, throughout the execution of the WORK. When previously used signs are to be utilized on the project, the ENGINEER will review and approve these signs prior to installation. The ENGINEER will require any sign with reduced reflectivity or excessive fading to be removed from the work zone. In the case of a dispute over a rejected used sign, the ENGINEER may at his discretion require measurements to be taken or review reflectivity or color data obtained by the CONTRACTOR to determine if the sign meets minimum standards for new materials. Replace signs that do not meet the minimum standards for new materials.

E. Signs, barricades, and related devices furnished and placed by the CONTRACTOR remain property of the CONTRACTOR.

F. When a work area has been established on one side of the roadway only, do not allow conflicted operations or parking on the opposite shoulder within 500 feet of the work area.

G. Do not park vehicles or unattended equipment, or store of materials within the clear zone. If the clear zone is not defined on the plans, the ENGINEER will inform the CONTRACTOR of the clear zone.

H. Consider sight distance and vertical curvature when placing traffic control devices.

I. **Advanced Warning Area and Flashing Arrow Board:** When specified, provide advance warning arrow panels for temporary traffic control. Use one of the specified types complying with the MUTCD. If none is specified, Provide Type C panels. Use flashing arrow boards that are 4 feet by 8 feet.

3.2 MINIMUM REQUIREMENTS FOR TRAFFIC CONTROL SETUP

A. General: Minimum traffic control devices shown on reference standards are the minimum. Assume the full responsibility to ensure that appropriate devices are employed and maintained during the duration of construction.

B. Minimum Traffic Control Device Layout for various construction situations are to be as indicated in the table below. These minimum requirements are the minimum required, assume the full and sole responsibility to supplement the minimum arrangements as required. The use of these minimum layouts does not relieve the CONTRACTOR from the responsibility of submitting a traffic control device plan sealed by a licensed professional engineer.

Minimum Requirement	Reference Layout
Layout for Placement of Road Work Next "XX" Miles and End Road Work Signs	LDOTD TTC – 00 (D)
Layout for Work Less than 15 Feet from the Traveled Way	LDOTD TTC – 01
Layout for Work Less than 15 Feet from the Traveled Way	LDOTD TTC – 02
Layout for Lane Closures on Two Lane Roads with Two Way Traffic Less Than 1600 Feet from Intersection	LDOTD TTC – 03
Layout for Lane Closures on Two Lane Roads with Two Way Traffic Greater Than 1600 Feet from Intersection	LDOTD TTC – 04
Layout for On - Site Diversion with Two Lane Traffic	LDOTD TTC – 05
Layout for Lane Closure on Four – Lane Undivided Highways	LDOTD TTC – 06
Layout for Lane Closure of Two Adjacent Lanes on Four – Lane Undivided Highways	LDOTD TTC – 07
Layout for Median Crossover on Divided Highways	LDOTD TTC – 08
Layout for One Lane Closure on Divided Highways	LDOTD TTC – 09
Layout for Lane and Sidewalk Closures in Urban Areas with Speed Limit Less than or Equal to 40 Miles per Hour	LDOTD TTC – 10
Layout for Lane Closure Using Temporary Barrier Rail on Divided Highways	LDOTD TTC – 11

Layout for Lane Closures Through Ramp Entrance and Exit Tapers	LDOTD TTC – 12
Layout for Lane Closure of Two Lanes on a Multi – Lane Highway	LDOTD TTC – 13
Layout for "Louisiana Left" on Interstate or Other Divided Highways	LDOTD TTC – 14
Layout for Short Duration Closure of Divided Highways	LDOTD TTC – 15
Layout for Temporary Road Closures	LDOTD TTC – 16
Layout for Moving Operations on Interstate or Other Multi – Lane Roadways	LDOTD TTC – 17
Layout for Moving Operations on Two – Way Two – Lane Roadways	LDOTD TTC – 18
Layout for Traffic Signal Installation and Maintenance at an Intersection	LDOTD TTC – 19

3.3 DROP – OFFS

A. Provide minimum temporary traffic control devices for Drop – offs as indicated on LDOTD TTC-00 (C)

3.4 CHANNELIZING DEVICES

A. Tubular markers, drums, super cones, vertical panels, and traffic cones may be utilized as channelizing devices. During nighttime operations, 36 – inch traffic cones will not be allowed.

B. Match retroreflective material pattern used on super cones with that used on drums.

C. Tangent Areas:

1. Standard Spacing: Use spacing as indicated on LDOTD TTC – 00 (C).

2. Daylight Operations: Space drums and super cones at standard spacing. Space all other devices at ½ of standard spacing.

3. Nighttime Operations: Space drums and super cones at standard spacing onyl.

D. Taper Areas:

1. Standard Spacing: Space devices as indicated on LDOTD TTC – 00 (C).

2. Daylight Operations: Space drums and super cones at standard spacing. Space all other devices at ½ of standard spacing.

3. Nighttime Operations: Use only drums at standard spacing.

E. Use Type C Steady Burn Lights on all channelizing devices in the taper and on the first two devices in the tangent at night.

F. Typical channelizing device lateral placement (do not include when it is used as a divider for opposing directions of traffic) is to be two feet off the lane line of the closed lane or two feet off the shoulder.

G. Devices may be adjusted laterally to accommodate ongoing work in the immediate vicinity but must be returned to the closed lane after to work activity has moved.

H. Use the same channelizing devices throughout the entire tangent area.

I. Use the same channelizing devices throughout the entire taper area.

3.5 TYPE III BARRICADES

A. Only Type III Barricades may be utilized.

B. When used for overnight closures, supplement all barricades that are placed in a closed lane or that extend across a highway with two Type B High Intensity lights.

C. When signs and lights are mounted to a barricade, they must meet NCHRP Report 350 and MASH requirements.

D. A truck with a truck – mounted attenuator may be substituted for a barricade when workers are present.

E. Place barricades, at a minimum:

1. At the beginning of a closed lane or shoulder and at 1,000 foot intervals where no active work is ongoing and the lane must remain closed. Place a minimum of two (2) barricades if the lane or shoulder closure is less than 2,000 feet (Place one barricade at the beginning of the lane closure after the buffer space and place the other in middle of the lane closure);

2. Before each or group of unfilled holes or holes filled with temporary material;

3. Before uncured concrete;

4. In the closed lane on each side of every intersection and crossover (do not block sight distance);

5. In front of piles of material (dirt, aggregate, broken concrete), culverts, and equipment which is near the work zone.

3.6 SIGNS

A. Supplement the first sign or pair of signs that gives a warning about a lane closure during nighttime operations with One Type B high intensity light.

B. Use caution not to damage existing signs which remain in place. Replace any such signs damaged at the cost of the CONTRACTOR.

C. Cover signs with a strong, lightweight material when not applicable. Burlap will not be acceptable for covering signs.

D. When portable sign frames are used, move the portable sign frames to an area inaccessible to traffic and not visible to drives.

E. Left side mounted signs will not be required for roadways with a center left turn lane and for undivided roadways.

F. Vinyl roll up signs may be used if work zone is in place for 12 hours or less, there are no more than 2 lanes in each direction, and if signs meet all size, color, retroreflectivity, and NHCRP 230 Report or MASH requirements.

G. One foot portable sign stands may be used if work zone is in place for 12 hours or less, the pre – construction posted speed limit is less than 45 miles per hour, and there are no more than 2 lanes in each direction.

H. Ensure that all signs are visible to the drivers. Ensure that no obstructions such as on – street parking or other traffic control devices block the sign.

I. On divided highways, place signs on the right and the left.

J. Sign Posts:

1. Mount signs measuring 10 square feet or less on 1 rigid post.

2. Mount signs measuring over 10 square feet on two (2) rigid posts.

3. Mount igns measuring over 20 square feet on at least three (3) rigid posts.

4. Observe and comply with allowable lap splices for U – channel posts be as indicated on LDOTD TTC -00 (C).

K. Observe sign height and offset from roadway as indicated on LDOTD TTC – 00 (C).

3.7 FLAGGING

A. Use qualified flaggers. Assume full and sole responsibility for training or assuring that all flaggers are qualified to perform flagging duties.

B. A qualified flagger is one that has completed courses such as those offered by ATSSA, Association of General Contractors, or other courses as approved by the LDOTD Work Zone Task Force.

C. Use a minimum 18-inch octagonal shape sign on minimum 6-foot stop/slow paddle and wear ANSI Class 2 Lime Green Vest during daytime operations and ANSI Class 3 Lime Green Ensemble during night operations.

D. In all flagging operations, the flagger must be visible from the flagger advance warning sign.

3.8 FLASHING ARROW BOARDS

A. Flashing arrow boards should be placed on the shoulder. When there is no shoulder or median area, place the arrow board within the closed lane behind the channelizing devices and as close to the beginning of the taper as practical.

B. Delineate flashing arrow boards with retroreflective devices.

C. Do not encroach the arrow board upon the traveled way. When flashing arrow boards are not in use, shield the arrow board by a guard rail or barriers or remove the arrow board.

D. Only use arrow boards for lane reduction tapers and do not use arrow boards for lane shifts.

3.9 DUTIES OF THE TRAFFIC CONTROL SUPERVISOR (TCS)

A. The CONTRACTOR's TCS's responsibility is traffic control management, and the TCS must be available to the ENGINEER to address traffic control issues as required. The following is a listing the primary responsibilities of the CONTRACTOR's TCS:

1. Personally provide traffic control management and supervision services at the site of the WORK. The TCS may have other duties, but be readily available at all times to provide TCS duties as required. Ensure that a minimum of one TCT is present on site during all working hours.

2. Assume responsibility for observing and evaluating both the day and night time performance of all traffic control devices installed on the project, in accordance with the traffic control plan to ensure that the devices are performing effectively as planned for both safety and traffic operations. Do this upon the initial installation of traffic control devices and when any modifications and/or changes are made, in addition to regular inspection requirements as specified herein.

3. Assume the responsibility for the training of flagging personnel. Ensure that all flagging is in compliance with the MUTCD, Part VI and the Louisiana Work Zone Traffic Control Details.

4. Coordinate all traffic control operations for the duration of the contract, including those of subcontractors, utility companies, and suppliers, to ensure that all traffic control is in place and fully operational prior to the commencement of any work. The ENGINEER recognizes that the TCS does not have direct control over the traffic control operations of utility companies. The coordination required by the TCS when dealing with utility companies is specifically for the purpose of coordinating concurrent utility traffic control with any other construction traffic control to avoid conflicts.

5. Coordinate, in writing, all project activities with the appropriate law enforcement, fire control agencies, and other appropriate public entities as determined at the pre – construction conference. Invite the above agencies to the pre – construction conference.

6. Prepare and submit statements concerning road closures, delays, and other project activities to the OWNER or ENGINEER when directed by the ENGINEER.

7. Assume responsibility for notifying the ENGINEER or all vehicular accidents and/or incidents related to the project traffic control. Document the time and date of the notification in the traffic control diary. Monitor and document queues that occur.

8. Attend the pre – construction conference and all project meetings.

9. Assume the responsibility for the maintenance, cleanliness, and removal of traffic control plan during working and non – working hours.

B. **Traffic Control Diary:** Maintain a project traffic control diary in a bound book. Obtain sufficient number of the diaries from the Louisiana Association of General Contractors (LAGC). Keep the traffic control diary on a daily basis and sign each daily entry. Make entries in ink, and there ensure there are no erasures or white – outs. Strike out erroneous entries and replace with the correct text. Photographs and videotapes may be used to supplement written text. Make the diary available at all times to the ENGINEER and submit a copy to the ENGINEER on a monthly basis. Failure to submit the diary will result in requests for payments being withheld until the past due copies of the diary are submitted. The traffic control diary will become property of the ENGINEER at the completion of the WORK.

C. **Traffic Control Plan Revisions:** Where revisions are made to the traffic control plan, regardless of whether or not the changes were promulgated by the CONTRACTOR, OWNER, or ENGINEER, submit a revised traffic control device plan by the CONTRACTOR.

D. **Inspection of Traffic Control:** Assume responsibilityle for the inspection of all traffic control devices every calendar day that traffic control devices are in use. This inspection may be delegated to the TCT. The "Quality Guidelines for Work Zone Traffic Control Devices" must be used to evaluate the condition of the traffic control devices to determine if acceptable for use. Provide for the immediate repair, cleaning, or replacement of any traffic control devices not functioning as required to ensure the safety or motorists, pedestrians, and construction personnel and/or not meeting the ATSSA standard. Conduct inspection of traffic control devices by the TCS at the beginning and end of each workday, and as directed by the ENGINER during the workday. Inspect the traffic control devices on weekends, holidays, or other non – work days at least once per day. Inspect traffic control devices at least once per week during nighttime periods and the same night after any modifications or changes have been made in the traffic control devices.

E. **Traffic Control Officer:** In some cases, and with the agreement of the ENGINEER, a Traffic Control Officer (TCO) may be utilized onsite where equipment is in or near to a roadway to assist in alerting or directing traffic near the work area. If required by the OWNER, responsibility of payment for the TCO will be the responsibility of the OWNER. If required by the CONTRACTOR's traffic control plan, responsibility of payment for the TCO is the responsibility of the CONTRACTOR.

3.10 FAILURE TO COMPLY WITH TRAFFIC CONTROL PLAN

A. The ENGINEER may suspend all or part of the CONTRACTOR's operation(s) for failure to comply with the reviewed traffic control plan or for failure to correct unsafe traffic conditions within a reasonable period of time after such notification is gien to the CONTRACTOR in writing.

B. In the event that the CONTRACTOR does not take appropriate action to bring the deficient traffic control into compliance with the traffic control plan or to correct unsafe traffic conditions, the OWNER and ENGINEER may employ others to correct the unsafe traffic conditions. Such costs will be deducted from payments due the CONTRACTOR.

- END OF SECTION -

SECTION 02717 – SEEDING

PART 1 -- GENERAL

1.1 THE REQUIREMENT

A. Prepare seed beds, furnish, and sow grass seed on the areas designated on the plans or as directed. Unless otherwise specified, apply seed either mechanically in a dry condition under this section. Obtain the services of an established soil testing entity to coordinate soil sampling, perform testing and analyses, and prepare recommendations for materials and procedures to be used during the pre-planting phase of new turf establishment. When practical, perform soil testing early enough to permit agricultural lime or other additives (if required) to be applied sufficiently in advance of planting so that the soil pH adjustment will occur before planting. Test and analyze samples to determine pH and fertility conditions. Use the test results and recommendations to determine the quantities of agricultural lime and fertilizer required for pre-planting applications. Provide a copy of the test report with recommendations to the engineer. Testing will be at no additional cost to the OWNER. Consider probable time of application when making agricultural lime recommendations.

1.2 CONTRACTOR SUBMITTALS, SAMPLING, AND TESTING

A. Provide submittals, samples for testing, and testing of materials in accordance with Section 01010 – Summary of the Work and General Requirements and Section 01030 – Submittals, Sampling and Testing Plan.

B. Materials proposed for and utilized in the WORK will be sampled as indicated in herein. The frequency of testing may be altered at the discretion of the ENGINEER. Provide all materials required for testing at no additional cost to the OWNER.

PART 2 -- PRODUCTS

2.1 TOPSOIL

A. Use topsoil complying with the requirements of Section 02200 – Earthwork.

2.2 FERTILIZER

A. Use fertilizer complying with the requirements of Section 02718 – Fertilizer and Agricultural Lime.

2.3 AGRICULTURAL LIME

A. Use agricultural lime complying with the requirements of Section 02718 – Fertilizer and Agricultural Lime.

2.4 SEED

A. Use seed complying with requirements of Louisiana law. Use the minimum percentage of pure live seed and the maximum percentage of weed seed permitted in accordance with the table below:

Variety	Minimum Percent of Pure Live Seed (Purity Times Germination Including Hard Seed by Count)	Maximum Percent of Weed Seed by Count
Hulled Bermuda	83	1
Pensacola Bahia	81	2
Crimson Clover	78	1
Kentucky 31 Fescue	80	1
Unhulled Bermuda	80	1
Ball Clover	80	1
Vetch	80	1
Lespedeza	80	1
Annual Rye	80	1
Browntop Mullet	80	1

B. Furnish and deliver each type of seed in separate bags or other containers. Provide each bag or container with an analysis tag which is a minimum No. 6 standard shipping tag having all information required by the Louisiana Seed Law.

C. Use previous season's crop (the last crop year for the crop kind in question) and the date of analysis shown on each tag must be within 5 months (excluding the month in which the test is completed) of the time of delivery to the project. Noxious weeds mean that list of weeds, except Bermuda, which has been adopted by the Louisiana Seed Commission as being noxious in Louisiana. Do not exceed the limitations prescribed in the regulations. In no case may the number of noxious weed seeds exceed 500 per pound of any type of seed. Analysis tags will only be removed from each bag or container only by the ENGINEER or an authorized representative.

PART 3 -- EXECUTION

3.1 SOIL AREAS

A. Select seed on the basis of five general soil areas as follows:

1. Alluvial soils of Mississippi and Red River bottoms.

2. Mississippi terraces and loess hill soils.

3. Coastal plain soils (rolling, hilly, and flatwoods areas in the central, northern, and eastern parts of the state).

4. Coastal prairie soils.

5. Ouachita River bottom

3.2 PREPARATION OF SEED BED

A. Prepare seed beds by disking, harrowing, or other approved methods. On slopes of 3-horizontal-to1 vertical and flatter, till the soil to a minimum of 4 inches depth. On slopes between 3-horizontal-to-1 vertical and 1-horizontal-to-1 vertical, till the soil to a minimum of 2 inches depth by scarifying with heavy rakes or other methods. Use rototillers where soil conditions and length of slope permit. On slopes 1-horizontal-to-1 vertical and steeper, no soil tillage is required. Maintain drainage patterns as indicated on the plans. Completely pulverize areas compacted by construction operations by tillage. Conform to topsoil requirements in Section 02200 – Earthwork for soil used for repair of surface erosion or grade deficiencies. Apply the pH adjuster, fertilizer, and soil conditioner during this procedure. Ensure that the prepared surface is a maximum of one inch below the adjoining grade of any surfaced area. Blend new surfaces to existing areas. Lightly rake the completed surfaces to remove debris.

B. Lawn Area Debris: Remove debris and stones greater than 5/8 inch in any dimension from surfaces designated on the plans as lawn areas, or as directed by the engineer

C. Field Area Debris: Remove debris and stones greater than 2 inches in any dimension from the surface.

D. Protection: Protect prepared surface areas from compaction or damage by vehicular or pedestrian traffic and surface erosion

3.3 PERMANENT SEEDING

A. Plant seed within the dates shown in the above Table, unless otherwise permitted in writing.

3.4 SEED ESTABLISHMENT

A. The seed establishment period begins on the first day of seeding work under the contract and ends 3 months after the last day of the seeding operation. Provide a written calendar time period for the seed establishment period. When there is more than one seed establishment period, describe the boundaries of each seeded area covered by each period. The seed establishment period may be modified for inclement weather, shut down periods, or for separate completion dates of areas as approved by the engineer.

B. Bermuda turf will be considered to be established and completed when the areas to be turfed have produced Bermuda grass stems or runners which overlap adjacent Bermuda grass growth over a minimum of 85 percent of the entire area and no spots greater than 4 square feet are void of Bermuda grass. This will be determined by the engineer in random sampling on a square yard basis.

C. Acceptance of the entire turfed area will be based on the engineer's visual inspection and determination of the required coverage. Acceptance will be based on coverage by Bermuda grass only. Dying or dead turf and eroded areas will not be accepted. Correct deficient areas at no additional cost to the OWNER. Partial areas will not be accepted.

Type	Seed Mixture	Minimum Pounds per Acre (Respectively)	Soil Area	Planting Dates	Establishment Period
A	Hulled Bermuda	30	1,2,3,4,5	Mar – Sep	Mar – Dec
B	Hulled Bermuda, Crimson Clover	20, 25	1,2,3,5	Feb – Mar	Feb – Jun
C	Kentucky 31 Fescue, Unhulled Bermuda	25,20	1,2,3,4,5	Sep – Feb	Sep – May
D	Unhulled Bermuda, Crimson Clover	20, 40	1,2,3,4,5	Sep – Feb	Sep – May
E	Pensacola Bahia	25	1,2,3,5	Mar – Sep	Mar – Dec
F	Ball Clover, Unhulled Bermuda	25, 20	1,2,3,4,5	Feb – Mar	Feb – Jun
G	Vetch, Unhulled Bermuda	40, 20	1,2,3,4,5	Sep – Oct	Sep – Jan
H	Annual Rye	30	1,2,3,4,5	Sep - Jan	Sep – Apr

- END OF SECTION –

SECTION 02718 – FERTILIZER AND AGRICULTURAL LIME

PART 1 -- GENERAL

1.1 THE REQUIREMENT

A. Furnish and apply commercial fertilizer and agricultural lime on the areas designated on the plans or as directed.

1.2 CONTRACTOR SUBMITTALS, SAMPLING, AND TESTING

A. Provide submittals, samples for testing, and testing of materials in accordance with Section 01010 – Summary of the Work and General Requirements and Section 01030 – Submittals, Sampling and Testing Plan.

B. Materials proposed for and utilized in the WORK will be sampled as indicated in herein. The frequency of testing may be altered at the discretion of the ENGINEER. Provide all materials required for testing at no additional cost to the OWNER.

PART 2 -- PRODUCTS

2.1 FERTILIZER

A. Use commercial type complying with the commercial fertilizer laws in effect as regulated by the Louisiana Department of Agriculture and Forestry. Provide the chemical composition notated as a 3-number sequence representing minimum percentages by weight, respectively, of nitrogen (N), available phosphoric acid (P2O5) and soluble potash (K2O). Provide Fertilizer supplied in granular, pellet, or tablet form in moisture proof containers.

2.2 AGRICULTURAL LIME

A. Use agricultural lime consisting of ground limestone or seashells containing at least 90 percent calcium carbonate equivalent (CaCO3) when tested in accordance with ASTM C602.

PART 3 -- EXECUTION

3.1 **APPLICATION**

A. **Commercial Fertilizer:** Uniformly broadcast fertilizer over areas to be fertilized by either hand or machine methods. Apply fertilizer at the rate shown in Table 02718-1.

B. Other balanced fertilizer may be used at the inverse proportional rate. After surface dressing, thoroughly incorporate fertilizer into the soil by light disking, harrowing, or roto-tilling. When dressing the surface by hand, the fertilizer may be applied before final raking and leveling.

C. **Agricultural Lime:** Uniformly spread agricultural lime at a minimum rate of 2 tons per acre with a spreader. Apply lime prior to seeding, topsoil placement, and slab sodding. Lime may be applied in conjunction with fertilizer. After lime application, disk the areas and harrow or roto-till to incorporate lime or lime-fertilizer into the top 3 inches to 6 inches of soil.

D. **Hydro – Seeding:** If using hydro-seeding methods, fertilizer and lime may be included in the seeding slurry. When specified by the manufacturer, water soluble, liquid fertilizer, or liquid lime will be allowed for hydro-seeding product applications.

TABLE 02718-1 – FERTILIZER APPLICATION RATES

Type Fertilizer	Pounds per Acre
8-8-8	1000
12-12-12	667
13-13-13	615
16-16-16	500

- END OF SECTION -

SECTION 02740 – CONSTRUCTION LAYOUT AND SURVEYING

PART 1 -- GENERAL

1.1 THE REQUIREMENT

A. Perform all surveying, layout, staking, calculating, and recording of data for the accurate layout and control of the WORK.

B. Provide technically qualified survey crews experienced in construction survey and staking of the type of WORK to be constructed under this contract. Provide personnel who will perform the layout and staking in a timely and accurate manner.

C. Assume full liability for the accuracy of the layout of the WORK.

1.2 REFERENCE STANDARDS

A. NOT USED

1.3 CONTRACTOR SUBMITTALS, SAMPLING, AND TESTING

A. Provide submittals, samples for testing, and testing of materials in accordance with Section 01010 – Summary of the Work and General Requirements and Section 01030 – Submittals, Sampling and Testing Plan.

PART 2 -- PRODUCTS (NOT USED)

2.1 MATERIAL

A. Furnish acceptable tools and supplies of the type and quality suitable for heavy duty construction survey work. Furnish stakes and hubs of sufficient length to provide a solid set in the ground with sufficient surface area above ground for necessary legible and durable markings

2.2 EQUIPMENT

A. Furnish survey instruments and supporting equipment which will achieve the specified tolerances.

B. Construction equipment controlled with a Global Positioning System (GPS) and Robotic Total Station (RTS) machine guidance system may be used in the construction of subgrade, subbase, and base aggregate courses, or other construction operations when approved subject to required tolerances being met. Develop a 3D model for RTS machine guidance and assume full responsibility for the accuracy of work staked with RTS machine guidance systems. The ENGINEER will not furnish a 3D model of the WORK for RMG work.

PART 3 -- EXECUTION

3.1 GENERAL

A. Provide a competent crew supervisor experienced in construction layout whenever surveying and staking is in progress.

B. Include staking and layout activities in the construction schedule furnished under Section 01010 – Summary of the Work and General Requirements. Include the dates and sequence of each staking activity.

C. The ENGINEER has set horizontal control points, vertical control points, and will provide data for use in establishing control for completion of each element of the work.

D. Include staking activities in the construction schedule required under Section 01010-Summary of the Work and General Requirements. Include the dates and sequence of each staking activity.

E. The ENGINEER will establish horizontal control points, vertical control points, and will provide data for use in establishing control for completion of each element of the work.

F. Data relating to horizontal and vertical alignment, theoretical slope stake catch points, and other design data will be furnished. Reformatting and additional calculations may be required for the convenient use of the furnished data. Provide immediate notification of apparent errors in the initial staking or in the furnished data.

G. Record survey and measurement field data in an approved format. Submit as-staked data and corrections made to the furnished survey data. Submit survey and measurement data at least weekly. Field data and supporting documentation become the property of the OWNER upon completion of the work.

H. Discuss and coordinate the following with the ENGINEER before surveying or staking:

1. Surveying and staking methods;

2. Stake marking;

3. Grade control for courses of material;

4. Referencing;

5. Structure control;

6. Field staking data;

7. Localization of the GPS systems to the established control points; and

8. Other procedures and controls necessary for the work.

I. Do not start work until staking or three-dimensional (3D) verification data for the affected work has been approved.

J. Preserve initial reference and control points. Notify the ENGINEER of missing control points or stakes at least 10 days before beginning construction. The ENGINEER will reestablish control points missing before the beginning of construction.

K. Acceptance or inspection of the construction staking does not relieve the CONTRACTOR of responsibility for correcting errors discovered during the work and for bearing additional costs associated with the error.

L. Maintain legibility of stake markings for the duration of the project or until notified in writing the stakes are no longer needed. Replace stakes if necessary to ensure markings are maintained.

M. Remove and dispose of flagging, paint, lath, stakes, and other staking material after the project is complete.

3.2 SURVEY AND STAKING REQUIREMENTS

A. **General:** Perform survey, staking, recording of data, and calculations as necessary to construct the project from the initial layout to final completion. Survey and set stakes to the tolerances in Table 02740-1. Reset stakes, refine 3D data, or both as many times as necessary to construct the work.

B. **Relationships to Property Lines and Servitudes:** Where the drawings indicate coordinates (or baseline station and offsets) along with distances from property or servitude lines, verify the agreement of the layout based on plan coordinates with plan dimensions from said lines. Notify the ENGINEER of any discrepancies prior to proceeding with construction. Avoid encroaching onto private property or servitudes.

C. **Control Points:** Relocate initial horizontal and vertical control points in conflict with construction to areas that will not be disturbed by construction operations. Furnish the coordinates, elevations, and supporting documentation for the relocated points before the initial points are disturbed. Set durable monuments for survey control that uniquely identify the points. Furnish the GPS localization results at least 7 days before beginning construction layout survey work. The ENGINEER may order the GPS localization calibration and associated 3D model to be broken into two or more zones to maintain the localized relationship between control points and original ground.

D. **Centerline Establishment:** Establish or reestablish centerline at roadway design cross-section locations and as necessary to construct the work. Reestablish the centerline when construction survey and staking work does not meet the tolerances.

E. **Original Ground Topographic Verification:** Use an approved method to regenerate cross-section data in areas where theoretical and actual ground elevations do not meet a tolerance of plus or minus 0.5 feet. Retake cross-section to verify existing ground topography to mapping. Submit cross-section or 3D data in electronic and printed format for approval. Reduce cross-sections to horizontal and vertical distances from centerline. Retake cross-section 10 feet beyond catch points to verify existing ground topography.

F. **Slope and Reference Stakes: Perform the following:**

1. **AMG Method:** After clearing operations are completed, set centerline reference stakes and hubs on both sides of centerline at 100-foot intervals at the clearing limit locations. Where clearing limits are greater than 10 feet (vertically, 25 feet horizontally, or both from subgrade hinge point; provide an additional reference stake and hub as approved by the ENGINEER. Label each centerline reference stake with station, hub elevation, and offset from centerline. Construct a 1000-foot long test section using AMG on the project at an approved location before beginning grading operations. Select a test location with superelevation and curve widening transitions if applicable. Notify the ENGINEER 10 days before beginning the test section. Demonstrate capability, knowledge, equipment, and experience to achieve work within tolerances. Allow 14 days to evaluate the test section. Do not start full grading operations until the test section is approved. Provide as-built cross-sections at random locations specified by the ENGINEER not to exceed 500-foot intervals. If as-built cross-sections do not meet the tolerances in Subsection 204.13(d); rework the section until the specified tolerances are achieved and provide additional cross-sections as directed by the ENGINEER at no cost to the Government.

2. **Conventional Methods:** Verify and set slope stakes on both sides of centerline at the theoretical catch point. If the theoretical catch point is not within a tolerance of 0.5 feet perform original ground topographic verification. Set the slope stake at the actual intersection of the design roadway slope with the natural ground-line. Set reference stakes outside the clearing limits. Include reference points and slope-stake information on the reference stakes. Establish slope stakes in the field as the actual point of intersection of the design roadway slope with the natural ground-line when theoretical catch point information is not available..

G. **Clearing and Grubbing Limits:** Set clearing and grubbing limits on both sides of centerline based on the actual slope-stake locations.

H. **Grade Finishing Stakes:** Perform the following:

1. **AMG Method:** Construct a 1000-foot test section using AMG on the project at an approved location before beginning grading operations. Select a test location with superelevation and curve widening transitions if applicable. Notify the ENGINEER 10 days before beginning the test section. Demonstrate the capability, knowledge, equipment, and experience to achieve work within tolerances. Allow 14 days to evaluate the test section. Do not start full grading operations until the test section is approved. Verify the grade elevation and horizontal alignment of roadway grade-finishing operations. Use conventional survey methods at random locations specified by the ENGINEER, not to exceed 500-foot intervals. Submit 3D coordinates of grade-finishing quality control checks.

2. **Conventional Methods:** Set grade-finishing stakes for grade elevations and horizontal alignment, on centerline and on each shoulder at design roadway cross-section locations. Set stakes at the top of subgrade and the top of each aggregate course. Reset grade finishing stakes as many times as necessary to construct the subgrade and each aggregate course. During turnout or pullout construction, set stakes on the centerline, on each normal shoulder, and on the shoulder of the turnout. In parking areas, set stakes at the center and along the edges of the parking area. Set stakes in ditches to be paved. When the centerline curve radius is less than or equal to 250 feet, use a maximum longitudinal spacing between stakes of 25 feet. When the centerline curve radius is greater than 250 feet, use a maximum longitudinal spacing between stakes of 50 feet. Use a maximum transverse spacing between stakes of 20 feet. Use brushes or guard stakes at each stake

I. **Culverts:** Verify and set culvert locations at the inlet, outlet, and inlet basin points according to the plans. Perform the following if culvert design does not fit field conditions:

1. Survey and record the ground profile along the culvert centerline;

2. Determine the slope catch points at the inlet and outlet;

3. Set reference points and record information necessary to determine culvert length and end treatments;

4. Plot to scale the profile along the culvert centerline. Show the natural ground, the flow line, the roadway section, and the culvert including end treatments and other appurtenances. Show elevations, grade, culvert length, and degree of elbow.

   a. For single skewed culverts, submit a plotted field-design cross-section normal to roadway centerline and at each end section. Plot the offset and elevation of

natural ground at the end section and at proposed template break points between centerline and the end section. Ensure the template design embankment slope is not exceeded;

b. For multiple skewed culverts, submit a plotted field design cross-section normal to roadway centerline and at the end sections (left and right) nearest to the shoulder. Plot the offset and elevation of natural ground at the end section and at proposed template break points between centerline and the end section. Ensure the template design embankment slope is not exceeded;

c. Submit the plotted field-design cross-section for approval of final culvert length and alignment. Plot at a clear and readable scale;

d. Set inlet, outlet, and reference stakes when the field design has been approved. Stake inlet and outlet ditches to make sure the culvert and end treatments (such as drop inlets) are functional; and

e. Adjust slope, reference, and clearing stakes as necessary to provide for culvert inlet treatments in cut slopes. Readjust slope, reference, and clearing stakes as necessary when culvert inlets are moved

J. **Bridges:** Set adequate horizontal and vertical control and reference points for bridge substructure and superstructure components. Establish and reference the bridge chord, bridge tangent, or control lines as specified on the bridge plans. Also establish and reference the centerline of each pier, bent, and abutment.

K. **Retaining Walls and Reinforced Soil Slopes:** Survey and record profile measurements along the face of the proposed wall or reinforced soil slope at 5 feet and 10 feet in front of the wall or slope face. Take cross-sections every 25 feet along the length of the wall or reinforced soil slope and at major breaks in terrain within the limits designated by the ENGINEER. Measure and record points every 25 feet and at major breaks in terrain for each cross-section. Set additional references and control points to perform the work.

L. **Borrow and Waste Sites:** For unit price contracts involving borrow and waste sites, perform field work necessary for initial layout and measurement of the borrow or waste site. Establish site limits and clearing limits. Measure both original and final ground conditions and submit cross-sections as directed by the ENGINEER.

M. **Permanent Monuments and Markers:** Perform survey and staking work necessary to establish permanent monuments and markers as specified in other sections or as directed, or reestablish monuments as specified in other sections or as directed.

N. **Miscellaneous Surveying and Staking:** Survey and stake other work (such as guardrail, pump stations, structures other than bridges, curb and gutter, turf establishment, utilities, and excavation limits for structures) to the proper location and required tolerances. Propose staking increments for approval by the ENGINEER when not specified.

O. **Construction Surveying and Staking Tolerances:** Provide layout work meeting the tolerances in Table 02740 – 1 below.

Item	***Horizontal Tolerance***	***Vertical Tolerance***
Control Points set from existing	*+/- 0.03 feet*	*+/- 0.01 feet x √N*

control provided by ENGINEER		
Mapping, Topography, and Cross Section Points	*+/-0.16 feet*	*+/-0.16 feet*
Centerline Points, including Point of Curvature, Point of Tangency, Point on Curve, Point on Tangent and References	*+/-0.06 feet*	*+/-0.06 feet*
Culverts, Ditches, and Minor Drainage Structure Stakes	*+/-0.16 feet*	*+/-0.16 feet*
Retaining Wall Stakes	*+/-0.06 feet*	*+/-0.03 feet*
Bridge Substructure Staking	*+/-0.03 feet*	*+/-0.03 feet*
Bridge Superstructure Staking	*+/-0.03 feet*	*+/-0.03 feet*
Clearing and Grubbing Limit Stakes	*+/-1.00 feet*	--
Roadway Subgrade Finish Stakes	*+/-0.16 feet*	*+/-0.03 feet*
Roadway Finish Grade Stakes	*+/-0.16 feet*	*+/-0.03 feet*
Miscellaneous Stakes, including structures	*+/-0.03 feet*	*+/-0.03 feet*

- END OF SECTION -

SECTION 03315 – GROUT

PART 1 -- GENERAL

1.1 THE REQUIREMENT

A. Provide grout, complete and in place, in accordance with the Contract Documents

B. The following types of grout are specified in this Section:

1. Cement Grout
2. Non-Shrink Grout - Class I (cement based)
3. Non-Shrink Grout - Class II (cement based)
4. Non-Shrink Epoxy Grout
5. Topping Grout and Concrete/Grout Fill

1.2 REFERENCE STANDARDS

A. *American Association of State Highway and Transportation Officials (AASHTO)*

AASHTO M171	*Standard Specification for Sheet Materials for Curing Concrete*
AASHTO M182	*Standard Specification for Burlap Cloth Made from Jute or Kenaf and Cotton Mats*

B. *ASTM International (ASTM)*

ASTM C307	*Standard Test Method for Tensile Strength of Chemical – Resistant Mortar, Grouts, and Monolithic Surfaces*
ASTM C496	*Standard Test Method for Splitting Tensile Strength of Cylindrical Concrete Specimens*
ASTM C579	*Standard Test Method for Compressive Strength of Chemical Resistant Mortars, Grouts, Monolithic Surfaces, and Polymer Concretes*
ASTM C580	*Standard Test Method for Flexural Strength and Modulus of Elasticity of Chemical – Resistant Mortars, Grouts, Monolithic Surfacings, and Polymer Concretes*
ASTM C827	*Standard Test Method for Change in Height at Early Ages of Cylindrical Specimens of Cementitious Mixtures*
ASTM C882	*Standard Test Method for Bond Strength of Epoxy Resin Systems Used with Concrete by Slant Shear*
ASTM C939	*Standard Test Method for Flow of Grout for Pre-placed Aggregate Concrete (Flow Cone Method)*

ASTM C1090	*Standard Test Method for Measuring Changes in Height of Cylindrical Specimens of Hydraulic – Cement Grout*
ASTM C1107	*Standard Specification for Packaged Dry Hydraulic Cement Grout (Nonshrink)*

C. *International Concrete Repair Institute*

Technical Guide for Selecting and Specifying Concrete Surface Preparation for Sealers, Coatings, and Polymer Overlays

D. *Louisiana Department of Transportation and Development Testing Procedures (LDOTD)*

TR 226 Specimens	*Making, Field Curing, and Transporting Concrete*
TR 230	*Curing, Capping, and Determining the Compressive Strength of Molded Concrete Cylinders*

1.3 CONTRACTOR SUBMITTALS, SAMPLING, AND TESTING

A. Provide submittals, samples for testing, and testing of materials in accordance with Section 01010 – Summary of the Work and General Requirements and Section 01030 – Submittals, Sampling and Testing Plan.

B. Materials proposed for and utilized in the WORK will be sampled as indicated in herein. The frequency of testing may be altered at the discretion of the ENGINEER. Provide all materials required for testing at no additional cost to the OWNER.

1.4 PRODUCT DELIVERY, STORAGE AND HANDLING

A. Store grouts in accordance with manufacturer's recommendations.

PART 2 -- PRODUCTS

2.1 APPLICATION

A. Unless indicated otherwise, provide grouts as listed below whether indicated on the Drawings or not.

Application	Type of Grout
Anchor bolts and reinforcing steel required to be set in grout in which the average working or operating temperature will be over 100 degrees F or in high fire risk areas.	Non-Shrink - Class I
Anchor bolts and reinforcing steel required to be set in grout that is not in high temperature or high fire risk areas.	Epoxy Anchor Grout
Beam and column (1 or 2 story) base plates less than 16-inches in the least dimension.	Non-Shrink - Class I
Column base plates (greater than 2 story or larger than 16-inches in the least dimension)	Non-Shrink - Class II
Storage tanks and other non-motorized equipment and machinery under 30 horsepower	Non-Shrink - Class I
Pumps over 1000 horsepower, unless indicated otherwise	Non-Shrink Epoxy
Filling blockout spaces for embedded items such as railing posts, gate guide frames, etc.	Non-Shrink - Class I (Class II where placement time exceeds 20 min.)
Under precast concrete elements	Non-Shrink - Class II

Toppings and concrete/grout fill less than 3-inches thick	Topping Grout
Toppings and concrete/grout fill greater than 3-inches thick	Minor Concrete, Class R or Class M per Section 03901 – Portland Cement Concrete
Surface repairs	Cement Grout
Repair of holes and defects in concrete members which are not water bearing and not in contact with soil or other fill material	Non-Shrink - Class I
Repair of holes and defects in concrete members which are water bearing or in contact with soil or other fill materials	Non-Shrink - Class II
Any application not listed above, where grout is called for on the Drawings	Non-Shrink Class I, unless noted otherwise

2.2 CEMENT GROUT

A. Use cement grout composed of one part cement, 3 parts sand, and the minimum amount of water necessary to obtain the desired consistency. Where needed to match the color of adjacent concrete, blend white Portland cement with regular cement as needed. Provide grout with a minimum compressive strength at 28 Days of 4000 psi.

B. Use materials complying with the requirements of Section 03901 – Portland Cement Concrete.

2.3 NON-SHRINK GROUTS (cement based)

A. **General:**

1. Use a prepackaged, inorganic, fluid, non-gas-liberating, non-metallic, cement type grout requiring only the addition of water. Cement from kilns burning metal-rich hazardous waste fuel may not be used.

2. Ensure that the manufacturer's instructions are printed on each bag or other container in which the materials are packaged. Use the specific formulation for each class of non-shrink grout indicated herein as recommended by the manufacturer for the particular application.

3. Do not use grout that contains chlorides or additives that may contribute to corrosion.

4. Use grout formulated to be used at any consistency from fluid to plastic.

5. Use cement-based non-shrink grout having the following minimum properties when tested at a fluid consistency, at 28 Days:

    a. Minimum tensile splitting strength of 500 psi per ASTM C 496 - Standard Test Method for Splitting Tensile Strength of Cylindrical Concrete Specimens.

    b. Minimum flexural strength of 1000 psi per ASTM C 580 - Standard Test Method for Flexural Strength and Modulus of Elasticity of Chemical-Resistant Mortars, Grouts, Monolithic Surfacings, and Polymer Concretes.

    c. Minimum bond strength (concrete to grout) of 1900 psi per modified ASTM C 882 - Standard Test Method for Bond Strength of Epoxy-Resin Systems Used with Concrete by Slant Shear.

    d. Use grout certified for use in a marine environment for grout to be used in a marine environment.

    e. Use grout which is certified for use in freeze/thaw environments.

B. **Class I Non-Shrink Grout:**

1. Use non-shrink grout a minimum 28 Day compressive strength of 5000 psi when mixed at a fluid consistency.

2. Use grout meeting the requirements of ASTM C 1107, Grade B or C, when mixed to fluid, flowable, and plastic consistencies.

3. Use grout with a maximum early age height change of 4.0 percent expansion, and with no shrinkage (0.0 percent) in accordance with ASTM C 827 – Test Method for Early Volume Change of Cementitious Mixtures. Use grout which does not bleed or segregate at maximum allowed water.

4. Use grout having no shrinkage (0.0 percent) and a maximum of 0.3 percent expansion in the hardened state when tested in accordance with ASTM C 1090 - Test Method for Measuring Changes in Height of Cylindrical Specimens from Hydraulic-Cement Grout.

5. Furnish certification that the non-shrink property of grout is not based on gas production or gypsum expansion.

6. **Manufacturers, or Equal: Masterflow 713 Plus** by **MBT-Chemrex; Five Star Grout** by **Five Star Products; Sikagrout 212** by **Sika Corporation; Premier** by **L&M Construction Chemicals; High-Flow Grout** by **Euclid Chemical Company; CG 200 PC** by **Hilti,** or equal.

C. **Class II Non-Shrink Grout:**

1. Use a high precision, fluid, extended working time, grout. Use grout with a minimum 28-Day compressive strength of 7500 psi, when mixed at a fluid consistency.

2. Use grout with a maximum early age height change of 4.0 percent expansion, and no shrinkage (0.0 percent) in accordance with ASTM C 827.

3. Use grout having no shrinkage (0.0 percent) and a maximum of 0.3 percent expansion in the hardened state when tested in accordance with ASTM C 1090.

4. Use grout having an extended working time of 30 minutes minimum when mixed to a fluid consistency as defined in ASTM C 827 at temperature extremes of 45 to 90 degrees F in accordance with ASTM C 1107.

5. Use grout meeting the requirements of ASTM C 1107, Grade B or C when tested using the amount of water needed to achieve fluid consistency per ASTM C 939.

6. Use grout that will not bleed or segregate at maximum allowed water content when tested.

7. Provide certification that its non-shrink property is not based on gas production or gypsum expansion.

8. **Manufacturers, or Equal: Masterflow 928** by **MBT-Chemrex; Five Star Fluid Grout 100** by **Five Star Products; Crystex** by **L&M Construction Chemicals;** or equal.

2.4 NON-SHRINK EPOXY GROUT

A. Use a flowable, non-shrink, 100 percent solids system. Use a grout system having 3 components: resin, hardener, and specially blended aggregate, each premeasured and prepackaged. Use a resin component which does not contain any non-reactive diluents. Resins containing butyl glycidyl ether (BGE) or other highly volatile and hazardous reactive diluents are not acceptable. Variation of component ratios is not permitted unless specifically recommended by the manufacturer. Ensure manufacturer's instructions are printed on each container in which the materials are packaged.

B. Use epoxy grout having a maximum early age height change of 4.0 percent expansion, and having no shrinkage (0.0 percent) in accordance with ASTM C 827, (modified for epoxy grouts by using an indicator ball with a specific gravity between 0.9 and 1.1).

C. Use epoxy grout having a negligible (less than 0.0006 in/in) length change after hardening, and a coefficient of thermal expansion less than 0.00003 in/in F when tested according to ASTM C 531 - Test Method for Linear Shrinkage and Coefficient of Thermal Expansion of Chemical-Resistant Mortars, Grouts, and Monolithic Surfacing.

D. Use epoxy grout which will develop a minimum compressive strength of 9000 psi in 24 hours and 13,000 psi in seven days when tested in accordance with ASTM C 579, method B.

E. Use an epoxy grout having a minimum working life of 90 to 120 minutes at 70 degrees F.

F. Use epoxy grout with an effective bearing area of a minimum of 95 percent EBA in accordance with ASTM C 1339 – Standard Test Method for Flowability and Bearing Area of Chemical-Resistant Polymer Machinery Grouts, for bearing area and flow.

G. Use epoxy grout of a chemical formulation recommended by the manufacturer for the particular application. Do not reduce aggregate loading or add solvents to increase flowability.

H. Use epoxy grout having the following minimum properties when tested at 7 Days:

1. Minimum bond strength to concrete of 3000 psi per ASTM C 882 modified.

2. Minimum bond strength to steel of 1700 psi per ASTM C 882 modified.

3. Minimum flexural strength of 2500 psi per ASTM C 580.

4. Minimum tensile strength of 2000 psi per ASTM C 307 -- Standard Test Method for Tensile Strength of Chemical-Resistant Mortar, Grouts, and Monolithic Surfacings.

I. **Manufacturers, or Equal: Five Star DP Epoxy Grout** by **Five Star Products, Inc.; Masterflow 648 CP Plus** by **MBT-Chemrex; Sikadur 42 Grout-Pak** by **Sika Corporation;** or equal.

2.5 TOPPING GROUT AND CONCRETE/GROUT FILL

A. Where fill is thicker than 3-inches, use Minor Concrete, Class M or R, as indicated in Section 03901 – Portland Cement Concrete.

B. For topping of slabs and concrete/grout fill for built-up surfaces of tank, channel, and basin bottoms, use grout composed of cement, fine aggregate, coarse aggregate, water, and admixtures proportioned and be mixed as indicated. Observe and adhere to requirements for materials and procedures indicated for normal concrete in Section 03901 – Portland Cement Concrete, unless indicated otherwise.

C. Use topping grout and concrete/grout fill containing a minimum of 564 pounds of cement per cubic yard with a maximum water cement ratio of 0.45.

D. Use coarse aggregate graded as follows:

U.S. STANDARD SIEVE SIZE	PERCENT BY WEIGHT PASSING
1/2 in	100
3/8 in	90-100
No. 4	20-55
No. 8	5-30
No. 16	0-10
No. 30	0

2.6 CURING MATERIALS

A. For prepackaged grouts, use curing materials as recommended by the manufacturer of prepackaged grouts.

B. For all other grouts, use burlap complying with AASHTO M182, Class 3, or combined burlap and white polyethylene sheeting complying with AASHTO M 171.

2.7 CONSISTENCY

A. Prepare grouts to a consistency be that necessary to completely fill the space to be grouted for the particular application. Dry pack consistency is such that the grout is plastic and moldable but will not flow. Where "dry pack" is called for in the Contract Documents, use a grout of that consistency. Use the type of grout as indicated herein for the particular application.

B. Adjust the slump for topping grout and concrete/grout fill o match placement and finishing conditions but do not allow the slump to exceed 4-inches.

2.8 MEASUREMENT OF INGREDIENTS

A. Make measurements for cement grout accurately by volume using containers. Do not make shovel measurements.

B. Measure ingredients for prepackaged grouts by means recommended by the manufacturer.

PART 3 -- EXECUTION

3.1 GENERAL

A. Do not place grouts until base concrete or masonry has attained its design strength, unless authorized otherwise by the ENGINEER.

B. When cementitious grouts are used on concrete surfaces, saturate the concrete surface with water for 24 hours prior to placement. Upon completion of the saturation period, remove the excess water with clean, oil free compressed air prior to grouting. Do not place epoxy grouts on wet, moist, or damp concrete substrate.

C. Ensure that surfaces that will be in contact with grout are free of dirt, loose rust, oil, wax, grease, curing compounds, laitance, loose concrete, and other deleterious materials prior to placement of grout.

D. Shade the WORK from sunlight for at least 24 hours before and 48 hours after grouting.

E. Contact the grout manufacturer's representative for assistance on hot and cold weather grouting techniques and precautions if applicable.

3.2 GROUTING PROCEDURES

A. **General:** Accomplish the mixing, surface preparation, handling, placing, consolidation, curing, and other means of execution for prepackaged grouts in compliance with the instructions and recommendations of the manufacturer.

B. Grout structural, equipment, tank, and piping support bases, unless indicated otherwise.

1. Block out the original concrete or finished off a sufficient distance below the plate to provide for a minimum one-inch thickness of grout, or a thickness as indicated.

2. After the base plate has been set in position at the proper elevation by steel wedges or double nuts on the anchor bolts, fill the space between the bottom of the plate and the original placement of concrete with non-shrink-type grout through a

headbox of appropriate size. Use a mixture of fluid consistency and pour the mixture continuously into the space between the plate and the base concrete. Ensure that forms for grout are tight against retaining surfaces, and seal joints as recommended by the grout manufacturer to be liquid-tight. Coat forms as recommended by the grout manufacturer for easy form release. Where this method of placement is not practical or where required by the ENGINEER, submit alternate grouting methods for acceptance by the ENGINEER.

C. Topping Grout and Concrete/Grout Fill

1. Complete mechanical, electrical, and finish WORK prior to placement of topping or concrete/grout fill. To ensure bonding to the base slab, give the base slab an exposed aggregate finish. Alternatively where accepted by the ENGINEER, give the base slab a roughened textured surface by a close-spaced rake while the surface is green. After curing, use high pressure washing to expose the aggregates and produce not less than a 3/16-inch amplitude roughness. Do not use jackhammers or chipping hammers.

2. Ensure that the minimum thickness of grout topping and concrete/grout fill is one-inch. Where the finished surface of concrete/grout fill is to form an intersecting angle of less than 45 degrees with the concrete surface it is to be placed against, form a key in the concrete surface at the intersection point. Form the key to a minimum of 3-1/2 inches wide by 1-1/2 inches deep.

3. Thoroughly clean and wet the slab to saturated surface dry (SSD) condition per the International Concrete Repair Institute (ICRI) -- Technical Guide for Selecting and Specifying Concrete Surface Preparation for Sealers, Coatings, and Polymer Overlays, prior to placing topping and fill. Do not place topping concrete until the slab is completely free from standing pools or ponds of water. Broom a thin coat of neat cement grout into the surface of the slab just before topping or fill placement. Do not allow the neat cement grout to dry before topping placement. If it does dry, immediately remove it using wet stiff brooms and reapply it. Compact the topping and fill by rolling or thorough tamping, brought to established grade, and floated. Screed in grouted fill for tank and basin bottoms where scraping mechanisms are to be installed by blades attached to the revolving mechanism of the equipment in accordance with the procedures outlined by the equipment manufacturer after the grout is brought to the established grade. Coat surface with evaporation retardant as needed to prevent plastic shrinkage cracks.

4. Topping grout placed on sloping slabs must proceed uniformly from the bottom of the slab to the top, for the full width of the placement.

5. Test the surface with a straight edge to detect high and low spots which, Immediately eliminate high and low spots. When the topping or fill has hardened sufficiently, steel trowel the topping grout to a smooth surface free from pinholes and other imperfections. An approved type of mechanical trowel may be used as an assist in this operation, make the last pass over the material by hand-troweling. During finishing, do not apply water, dry cement, or mixture of dry cement and sand to the surface.

6. As soon as topping or fill finishing is completed, coat surface with curing compound. After the topping is set and sufficiently hard in clarifiers and where required by the ENGINEER, fill the tank with sufficient water to cover the entire floor for 14 days.

3.3 CONSOLIDATION

A. Place grout in such a manner, for the consistency necessary for each application, to assure that the space to be grouted is completely filled.

3.4 CURING

A. Cure cement based grouts with wet burlap or combined wet burlap and white polyethylene sheeting and per the manufacturer's recommendations.

- END OF SECTION -

SECTION 03805 – STRUCTURAL CONCRETE

PART 1 -- GENERAL

1.1 THE REQUIREMENT

A. Furnish, place, and cure Structural Concrete and appurtenant work, formwork, bracing, shoring, supports, falsework, complete and in place, in accordance with the Contract Documents.

B. Conform to requirements of Section 02200 – Earthwork for structural excavation and backfill.

C. Unless otherwise noted, cast structural concrete in place. Substitutions may be allowed if in the opinion of the ENGINEER a pre – cast structure will be equivalent in performance to cast – in – place structure. The ENGINEER will require that pre – cast substitutions be designed by the CONTRACTOR. If allowed, substitutions of precast structures for cast – in – place structures will be at no additional cost to the OWNER.

D. Standard pre – cast structures include items governed by ASTM C478 or other specific design standard referenced in the drawings or specified elsewhere. Custom designed structures are all other precast structures or pre – cast substitutions for cast – in – place concrete.

1.2 REFERENCE STANDARDS

A. *American Concrete Institute (ACI)*

ACI 301	*Specifications for Structural Concrete for Buildings*
ACI 318	*Building Code Requirements for Structural Concrete*
ACI 347	*Guide to Formwork for Concrete*
ACI 350	*Code Requirements for Environmental Engineering Structures*

B. *American Welding Society*

AWS D1.1	*Structural Welding Code*

C. *ASTM International (ASTM)*

ASTM C309	*Standard Specification for Liquid Membrane Forming Curing Compounds for Curing Concrete*
ASTM C478	*Standard Specification for Circular Precast Reinforced Concrete Manhole Sections*
ASTM C1064	*Standard Test Method for Temperature of Freshly Mixed Hydraulic Cement Concrete*
ASTM C1077	*Standard Practice for Agencies Testing Concrete and Concrete Aggregates for Use in Construction and Criteria for Testing Agency Evaluation*

ASTM C1107	*Standard Specification for Packaged Dry Hydraulic Cement Grout*
ASTM D5249	*Standard Specification for Backer Material for Use with Cold- and Hot-Applied Joint Sealants in Portland-Cement Concrete and Asphalt Joints*
ASTM D5893	

D. *Louisiana Department of Transportation and Development (LDOTD)*

AML	*Approved Materials List*
TR 202	*Air Content of Freshly Mixed Concrete*
TR 207	*Slump of Portland Cement Concrete*
TR 226	*Making, Field Curing, and Transporting Concrete Test Specimens*
TR 227	*Making and Field Curing Compressive Strength Specimens for Concrete Pipe*
TR 230	*Curing, Capping, and Determining the Compressive Strength of Cylindrical Concrete Specimens*

E. *United States Army Corps of Engineers (USACE)*

CRD-C-572	*Corps of Engineers Specifications for PVC Waterstop*

F. *U.S. Product Standards*

PS 1	*US Voluntary Product Standard – Structural Plywood*
PS 20	*American Softwood Lumber Standard*

1.3 CONTRACTOR SUBMITTALS, SAMPLING, AND TESTING

A. Provide submittals, samples for testing, and testing of materials in accordance with Section 01010 – Summary of the Work and General Requirements and Section 01030 – Submittals, Sampling and Testing Plan.

B. Materials proposed for and utilized in the WORK will be sampled as indicated in herein. The frequency of testing may be altered at the discretion of the ENGINEER. Provide all materials required for testing at no additional cost to the OWNER.

1.4 CLASSES AND USES OF CONCRETE

A. Unless noted otherwise on the drawings, furnish concrete as indicated in the table below:

Classes and Uses of Concrete

Concrete Class	Use
A1, A2, A3	Concrete exposed to sea water, and all other concrete except as specified herein

Mass (A1), Mass (A2), Mass (A3)	Mass Concrete
P1, P2, P3	Precast Concrete
S	Drilled Shafts, Seals, and Underwater Placements
M	Minor Structures

PART 2 -- PRODUCTS

2.1 FORM AND FALSEWORK MATERIALS

A. Except as otherwise expressly accepted by the ENGINEER, provide new lumber for use as forms, shoring, or bracing.

B. Conform to the following requirements:

1. **Lumber**: Use Douglas Fir or Southern Yellow Pine, construction grade or better, in conformance with U.S. Product Standard PS 20 - American Softwood Lumber Standard.

2. **Plywood for concrete formwork**: Use new, waterproof, synthetic resin bonded, exterior type Douglas Fir or Southern Yellow Pine plywood manufactured especially for concrete formwork and conform to the requirements of PS 1 - Construction and Industrial Plywood for Concrete Forms, Class I. Use edge – sealed plywood.

3. Use metal, wood, plywood, or other material that will not adversely affect the concrete and will facilitate placement of concrete to the shape, form, line, and grade required.

4. Metal Forms: Use an approved type that will accomplish such results.

5. **Wood forms for surfaces to be painted:** Use Medium Density Overlaid plywood, MDO Ext. Grade.

C. Unless otherwise indicated, provide exterior corners in concrete members with 3/4-inch chamfers or be tooled to a 1/2-inch radius. Do not provide re-entrant corners in concrete members with unless otherwise indicated.

D. Design forms and falsework to support the roof and floor slabs for the total dead load, plus a live load of 50 psf (minimum). Design for a minimum combined dead and live loads of 100 psf.

2.2 FORM TIES

A. Provide form ties with a plastic cone or other suitable means for forming a conical hole to insure that the form tie may be broken off back of the face of the concrete. Use removeable cones for rod ties or other removable form-tie fasteners having a circular cross-section not exceeding 1-1/2 inches. Use such fasteners as to leave holes of regular shape for reaming. Use **Wrench Head Snap Ties** by **MeadowBurke, Snap Ties** by **Dayton/Richmond**, or equal.

B. Removable taper ties may be used when approved by the ENGINEER. If permitted, use **Taper Ties** by **MeadowBurke, Taper Ties** by **Dayton/Richmond**, or equal.

2.3 REINFORCING STEEL

A. Conform to Section 03806 – Reinforcement unless otherwise noted.

2.4 PORTLAND CEMENT CONCRETE

A. Conform to Section 03901 – Portland Cement Concrete.

2.5 CURING MATERIALS

A. Conform to the following requirements and ASTM C 309 - Liquid Membrane-Forming Compounds for Curing Concrete:

1. Use white-pigmented and resin-based compounds. Do not use sodium silicate compounds. Use **Kurez VOX White Pigmented** by **Euclid Chemical Company, Cure R-2** by **L&M Construction Chemicals, 1200-White** by **W.R. Meadows,** or equal. When curing compound must be removed for finishes or grouting, usebe **Kurez DR VOX** by **Euclid Chemical Company, Masterkure-100W** by **ChemRex MBT, L&M Cure R** by **L&M Construction Chemicals, 1100-Clear** by **WR Meadows,** or equal. Ensure compounds used meet local VOC requirements.

2. **Polyethylene Sheet**: Use white polyethylene sheet with a nominal thickness of 6-mils. Use a product with loss of moisture when determined in accordance with the requirements of ASTM C 156 - Standard Test Method for Water Retention by Concrete Curing Materials, not exceeding 0.055 grams per square centimeter of surface.

3. **Evaporation Retardant:** Use **Confilm** by **ChemRex MBT, Eucobar** by **Euclid Chemical Company, E-CON** by **L&M Construction Chemicals, Inc.,** or equal.

2.6 JOINT SEALANTS

A. Use extruded sealants complying with either of the following:

1. **Silicone Sealant (Single Component):** Use a product complying with ASTM D 5893. Use backer material of the appropriate size complying with ASTM D 5249, Type 3. Use silicone sealant, backer materials and primers that are approved products listed on the LDOTD AML (formerly QPL 42).

2. **Silicone Sealant (Two – Component Rapid Cure):** Use two – component silicone sealant complying with ASTM D5893 and meeting the requirements for single component sealants when mixed and prepared in accordance with the manufacturer's recommendations. Use backer material of the appropriate size conforming to ASTM D5249, Type 3. User silicone sealant, backer materials and primers, that are products listed on the LDOTD AML (formerly QPL 42).

2.7 WATERSTOPS

A. **Polyvinyl Chloride (PVC) Waterstop:** Use product complying with U.S. Army Corps of Engineers CRD-C- 572

B. Where not shown on the plans, submit details of installation and splicing, to the ENGINEER for review. When PVC waterstops are used, submit a certificate of compliance indicating compliance with these specifications.

2.8 SPECIAL SURFACE FINISH FOR CONCRETE

A. Use an approved product listed on the LDOTD AML (formerly QPL 14)

2.9 FORM RELEASE AGENTS

A. Use an approved product listed on the LDOTD AML (formerly QPL 29).

2.10 PRECAST CONCRETE

A. **General:** Use a manufacturer in conformance with the NCPA Quality Control Manual for Precast Concrete Plants, unless noted otherwise.

B. **Design:** The design of precast concrete units to withstand indicated design load conditions in accordance with applicable industry design standards ACI 318, ACI 350, ASTM, ACPA Design Manual, PCI MNL-120, and AASHTO, and/or as indicated on the drawings. Design must also consider stresses induced during handling, shipping and installation in order to avoid product cracking or other handling damage. Indicate design loads for precast concrete units on the shop drawings. Provide design calculations and drawings of non-standard precast units signed and sealed by a licensed professional engineer and submitted for ENGINEER approval prior to fabrication. Include the analysis of units for lifting stresses and the sizing of lifting devices.

C. **Forms:** Use forms for manufacturing precast concrete units the type and design consistent with industry standards and practices. Use forms which of produce uniform products and dimensions and which comply with the requirements specified herein. Apply and utilize form release agent according to the manufacturer's recommendations and do not allow the agent build up on the form casting surfaces.

D. **Reinforcement:** Use reinforcement per Section 03806 – Reinforcement.

E. **Embedded Items:** Where required by the Contract Documents or otherwise required by design for custom or standard pre-cast concrete structures, place embedded items. Where welding is required, perform welding in accordance with AWS D1.1. Provide items embedded in precast concrete of the type required for the intended use.

F. **Concrete:** Comply with the requirements of Section 03901 – Portland Cement Concrete.

G. **Grout:** Comply with the requirements of Section 03315 – Grout.

2.11 MISCELLANEOUS MATERIALS

A. **Epoxy Adhesives:** Use the following products:

1. For bonding freshly-mixed, plastic concrete to hardened concrete, **Sikadur 32 Hi-Mod Epoxy Adhesive** by **Sika Corporation, Concresive Liquid (LPL)** by **Chem Rex MBT**; **BurkEpoxy MV** by **Burke** by **Edoco,** or equal.

2. For bonding hardened concrete or masonry to steel, **Sikadur 31 Hi-Mod Gel** by **Sika Corporation, BurkEpoxy NS** by **Burke** by **Edoco, Concresive Paste (LPL)** by **Chem Rex MBT**; or equal.

B. Use epoxy grout for grouting reinforcing bars formulated for such application, for the moisture condition, application temperature, and orientation of the hole to be filled. Use grout meeting the requirements in Section 03315 - Grout.

PART 3 -- EXECUTION

3.1 GENERAL FORMWORK REQUIREMENTS

A. Use forms to confine the concrete and shape it to the required lines wherever necessary. Assume full responsibility for the adequate design of forms, and promptly remove from the site and replace any forms that are unsafe or inadequate in any respect from the WORK. Provide a sufficient number of forms of each kind to permit the required rate of progress to be maintained. Comply with comply with applicable local, state and federal regulations for the design and inspection of concrete forms, falsework, and shoring. Design, construct, maintain, prepare, and remove forms in accordance with ACI 347 - Guide to Formwork for Concrete and the requirements herein.

B. Use forms that are true in every respect to the required shape and size, which conform to the established alignment and grade, and are of sufficient strength and rigidity to maintain their position and shape under the loads and operations incident to placing and vibrating the concrete.

3.2 CONSTRUCTION

A. **Vertical Surfaces:** Form vertical surfaces of concrete members, except where placement of the concrete against the ground is indicated. Add not less than 1-inch of concrete to the indicated thickness of a concrete member where concrete is permitted to be placed against trimmed ground in lieu of forms. Permission to do this on other concrete members will be granted only for members of comparatively limited height and where the character of the ground is such that it can be trimmed to the required lines and will stand securely without caving or sloughing until the concrete has been placed.

B. **Construction Joints:** Concrete construction joints will not be permitted at locations other than those indicated, except as may be acceptable to the ENGINEER. When a second lift is placed on hardened concrete, take special precautions in the way of the number, location, and tightening of ties at the top of the old lift and bottom of the new to prevent any unsatisfactory effect whatsoever on the concrete. Set pipe stubs and anchor bolts the forms where required.

C. **Form Ties**

1. **Embedded Ties:** Wire ties for holding forms will not be permitted. Do no leave any form-tying device or part thereof, other than metal, in the concrete. Do not remove ties in such manner as to leave a hole extending through the interior of the concrete members. The use of snap-ties which cause spalling of the concrete upon form stripping or tie removal will not be permitted. If steel panel forms are used, provide rubber grommets where the ties pass through the form in order to prevent loss of cement paste. Where metal rods extending through the concrete are used to support or to strengthen forms, leave the rods embedded and terminate the rods terminate not less than 1-inch back from the formed face or faces of the concrete.

2. **Removable Ties:** Where taper ties are approved for use, after the taper tie is removed, thoroughly clean and roughen the hole for bond. Locate a precast neoprene or polyurethane tapered plug at the wall centerline. Completely fill the hole with non-shrink or regular cement grout.

3.3 REUSE OF FORMS

A. Forms may be reused only if in good condition and only if acceptable to the ENGINEER. Light sanding between uses will be required wherever necessary to obtain uniform surface texture on exposed concrete surfaces. Exposed concrete surfaces are defined as surfaces which are permanently exposed to view.

3.4 REMOVAL OF FORMS

A. Strictly follow careful practices for removing the forms, and accomplish this WORK with care so as to avoid injury to the concrete. No heavy loading on green concrete will be permitted. Do not remove forms from members which must support their own weight until they have attained at least 75 percent of the 28-Day strength of the concrete. Leave forms for vertical walls and columns in place at least 48 hours after the concrete has been placed. Leave forms for parts of the WORK not specifically mentioned in place for periods of time as recommended in ACI 347.

3.5 PREPARATION OF SURFACES FOR CONCRETING

A. **General:** Thoroughly wet earthen surfaces by sprinkling prior to the placing of any concrete, and keep these surfaces moist by frequent sprinkling up to the time of placing concrete thereon. Ensure surfaces are free from standing water, mud, and debris at the time of placing concrete.

B. **Joints in Concrete:** Concrete surfaces upon or against which concrete is to be placed, where the placement of the concrete has been stopped or interrupted so that, as determined by the ENGINEER, the new concrete cannot be incorporated integrally with that previously placed, are defined as construction joints. Give the surfaces of horizontal joints a compacted, roughened surface for good bonding. Except where the Drawings call for joint surfaces to be coated, clean the joint surface of laitance, loose or defective concrete, and foreign material, and be roughen to a minimum 1/4-inch amplitude. Accomplish such cleaning and roughening by hydroblasting. Remove pools of water from the surface of construction joints before the new concrete is placed.

C. **Placing Interruptions:** When placing of concrete is to be interrupted long enough for the concrete to take a set, give the working face a shape by the use of forms or other means, that will secure proper union with subsequent WORK. Make construction joints be made only where acceptable to the ENGINEER.

D. **Embedded Items**

1. Do not place concrete until formwork, installation of parts to be embedded, reinforcement steel, and preparation of surfaces involved in the placing have been completed and accepted by the ENGINEER at least 4 hours before placement of concrete. Clean surfaces of forms and embedded items that have become encrusted with dried grout from previous usage before the surrounding or adjacent concrete is placed.

2. Set reinforcement, anchor bolts, sleeves, inserts, and similar items and secured in the forms at locations indicated or by Shop Drawings and as acceptable to the ENGINEER before any concrete is placed. Accuracy of placement is the responsibility of the CONTRACTOR.

E. **Casting New Concrete Against Old:** Where concrete is to be cast against old concrete (defined as any concrete which is greater than 60 Days of age), thoroughly clean and roughen the surface of the old concrete by hydroblasting (exposing

aggregate) prior to the application of an epoxy bonding agent. Apply the bonding agent according to the bonding agent manufacturer's instructions and recommendations.

F. Do not place concrete in any structure until water entering the space to be filled with concrete has been properly cut off or has been diverted by pipes, or other means, and carried out of the forms, clear of the WORK. Do not deposit concrete underwater nor allow still water to rise on any concrete until the concrete has attained its initial set. Do not permit water to flow over the surface of any concrete in such manner and at such velocity as will injure the surface finish of the concrete. Pumping or other necessary dewatering operations for removing ground water, if required, will be subject to the review of the ENGINEER.

G. **Corrosion Protection:** Position and support pipe, conduit, dowels, and other ferrous items required to be embedded in concrete construction prior to placement of concrete that there will be a minimum of 2-inches clearance between said items and any part of the concrete reinforcement. Securing such items in position by wiring or welding them to the reinforcement will not be permitted.

H. Provide for openings for pipes, inserts for pipe hangers and brackets, and anchors, where practicable, during the placing of concrete.

I. Accurately set and maintain anchor bolts in position by templates while being embedded in concrete.

3.6 HANDLING, TRANSPORTING, AND PLACING

A. **General:** Placing of concrete in conformance to the applicable requirements of Chapter 8 of ACI 301 and the requirements of this Section. Do not use aluminum materials in conveying any concrete.

B. **Non-Conforming WORK or Materials:** Reject concrete which during or before placing is found not to conform to the requirements indicated herein and immediately remove it from the WORK. Remove from the WORK and replace concrete which is not placed in accordance with these Specifications or which is of inferior quality at no additional cost to the OWNER.

C. **Unauthorized Placement:** Do not place any concrete except in the presence of a duly authorized representative of the ENGINEER. Notify the ENGINEER in writing at least 24 hours in advance of placement of any concrete.

D. Placement in Wall and Column Forms

1. Do not drop concrete through reinforcement steel or into any deep form nor place concrete in any form in such a manner as to leave accumulation of mortar on the form surfaces above the placed concrete. In such cases, use some means such as the use of hoppers and, if necessary, vertical ducts of canvas, rubber, or metal for placing concrete in the forms in a manner that it may reach the place of final deposit without separation. Do not allow the free fall of concrete to exceed 4-feet in walls and 8-feet in columns below the ends of ducts, chutes, or buggies. Uniformly distribute concrete during the process of depositing and do not displace concrete after depositing in the forms more than 6-feet in horizontal direction. Deposti concrete in wall forms uniform horizontal layers not deeper than 2-feet; and take care to avoid inclined layers or inclined construction joints except where such are required for sloping members. Place each later while the previous layer is still soft. Do not exceed a rate of 5 – feet of vertical rise per hour when placing concrete in

wall forms. Provide sufficient illumination in the interior of forms so that the concrete at the places of deposit is visible from the deck or runway.

2. Enusre the surface of the concrete is level whenever a run of concrete is stopped. To insure a level, straight joint on the exposed surface of walls, tack a wood strip at least 3/4-inch thick to the forms on these surfaces. Carry the concrete about 1/2-inch above the underside of the strip. About one hour after the concrete is placed, remove the strip and level and any irregularities in the edge formed by the strip with a trowel, and remove laitance.

E. **Conveyor Belts and Chutes:** Design and arrange ends of chutes, hopper gates, and other points of concrete discharge throughout the CONTRACTOR'S conveying, hoisting, and placing system arranged that concrete passing from them will not fall separated into whatever receptacle immediately receives it. If using conveyor belts, use a type acceptable to the ENGINEER. Chutes longer than 50-feet will not be permitted. Use minimum slopes of chutes that concrete of the required consistency will readily flow in them. If a conveyor belt is used, wipe the belt clean by a device operated in such a manner that none of the mortar adhering to the belt will be wasted. Cover conveyor belts and chutes.

3.7 PUMPING OF CONCRETE

A. **General:** If the pumped concrete does not produce satisfactory end results, discontinue the pumping operation and proceed with the placing of concrete using conventional methods.

B. Pumping Equipment:

1. Use pumping equipment having a minimum 2 cylinders and that is designed to operate with one cylinder only in case the other one is not functioning. In lieu of this requirement, the CONTRACTOR may have a standby pump on the Site during pumping.

2. Use a minimum diameter of the hose conduits in accordance with ACI 304.2R - Placing Concrete by Pumping Methods.

3. Replace pumping equipment and hose conduits that are not functioning properly.

4. Aluminum conduits for conveying the concrete will not be permitted.

3.8 TAMPING AND VIBRATING

A. Thoroughly settle and compact concrete as it is placed in the forms or in excavations, throughout the entire depth of the layer which is being consolidated, into a dense, homogeneous mass, filling all corners and angles, thoroughly embedding the reinforcement, eliminating rock pockets, and bringing only a slight excess of water to the exposed surface of concrete. Use high speed power vibrators (8000 to 12,000 rpm) of an immersion type in sufficient number and with at least one standby unit as required.

B. Internally vibrate concrete placed in walls and at the same time rammed, stirred, or worked with suitable appliances, tamping bars, shovels, or forked tools until it completely fills the forms or excavations and closes snugly against all surfaces. Do not place subsequent layers of concrete until the layers previously placed have been worked thoroughly. Provide vibrators in sufficient numbers, with standby units as required, to accomplish the required results within 15 minutes after concrete of the prescribed consistency is placed in the forms. Do not contact the surfaces of the forms with the

vibrator. Take care not to vibrate concrete excessively or to work it in any manner that causes segregation of its constituents.

3.9 FINISHING CONCRETE SURFACES

A. **General:** Provide surfaces free from fins, bulges, ridges, offsets, honeycombing, or roughness of any kind, and which present a finished, smooth, continuous hard surface. Allowable deviations from plumb or level and from the alignment, profiles, and dimensions indicated are defined as tolerances and are indicated above. These tolerances are to be distinguished from irregularities in finish as described herein. Do not use aluminum finishing tools.

B. **Formed Surfaces:** Unless the special surface finish is indicated on the drawings, no treatment is required after form removal except for curing, repair of defective concrete, and treatment of surface defects.

C. **Unformed Surfaces:** After proper and adequate vibration and tamping, bring the unformed top surfaces of slabs, floors, walls, and curbs to a uniform surface with suitable tools. Whenever the air temperature exceeds 85 degrees F or the wind speed exceeds 25 mph at the time of placement treat the concrete as follows. Immediately after the concrete has been screeded, treat the concrete with a liquid evaporation retardant. Treat the concrete again after each WORK operation as necessary to prevent drying shrinkage cracks. The classes of finish for unformed concrete surfaces are designated and defined as follows:

1. **Finish U1** - Sufficient leveling and screeding to produce an even, uniform surface with surface irregularities not to exceed 3/8-inch. No further special finish is required.

2. **Finish U2** - After sufficient stiffening of the screeded concrete, float finish surfaces with wood or metal floats or with a finishing machine using float blades. Excessive floating of surfaces while the concrete is plastic and dusting of dry cement and sand on the concrete surface to absorb excess moisture will not be permitted. Float the minimum necessary to produce a surface that is free from screed marks and is uniform in texture. Do not allow surface irregularities in excess of 1/4-inch. Tool joints and edges where indicated or as determined by the ENGINEER.

3. **Finish U3** - After the Finish U2 surface has hardened sufficiently to prevent excess of fine material from being drawn to the surface, perform steel troweling with firm pressure such as will flatten the sandy texture of the floated surface and produce a dense, uniform surface free from blemishes, ripples, and trowel marks. Provide a finish that is smooth and free of irregularities.

4. **Finish U4** - Trowel the Finish U3 surface to remove local depressions or high points. In addition, give the surface a light broom finish with brooming perpendicular to drainage unless otherwise indicated. Provide a surface rough enough to provide a nonskid finish.

D. Finish unformed surfaces according to the following schedule:

UNFORMED SURFACE FINISH SCHEDULE

Area	Finish
Grade slabs and foundations to be covered with concrete or fill material	U1
Floors to be covered with grouted tile or topping grout	U2
Slabs to be covered with built-up roofing	U2
Interior slabs and floors to receive architectural finish	U3
Slabs	U4
Top surface of walls	U3

3.10 CURING AND DAMPPROOFING

A. **General:** Cure concrete not less than 7 Days after placing, in accordance with the methods indicated below for the different parts of the WORK.

Surface to be Cured or Dampproofed	Method
Unstripped forms	1
Construction joints between footings and walls, and between floor slab and columns	2
Encasement and ductbank concrete and thrust blocks	3
Concrete surfaces not specifically provided for elsewhere in this Paragraph	4
Buried slabs and backfilled walls	5

B. **Method 1:** Wet wooden forms immediately after concrete has been placed and keep forms wet with water until removal. If steel forms are used, keep the exposed concrete surfaces continuously wet until the forms are removed. If forms are removed within 7 Days of placing the concrete, continue curing in accordance with Method 4 below.

C. **Method 2:** Cover the surface with burlap mats and keep the surfaces and mats wet with water for the duration of the curing period, until the concrete in the walls has been placed. Do not apply curing compound to surfaces cured under Method 2.

D. **Method 3:** Cover the surface with moist earth not less than 4 hours nor more than 24 hours after the concrete is placed. Do not begin earthwork operations that may damage until at least 7 Days after placement of concrete.

E. **Method 4:** Spray the surface with a liquid curing compound.

1. Apply the compound accordance with the manufacturer's printed instructions at a maximum coverage rate of 200 square feet per gallon and in such a manner as to cover the surface with a uniform film that will seal thoroughly.

2. Where the curing compound method is used, exercise care to avoid damage to the seal during the 7 Day curing period. If the seal is damaged or broken before the expiration of the curing period, repair the break immediately by the application of additional curing compound over the damaged portion.

3. Wherever curing compound has been applied by mistake to surfaces against which concrete subsequently is to be placed and to which it is to adhere, entirely remove the compound by wet sandblasting just prior to the placing of new concrete.

4. Apply curing compound as soon as the concrete has hardened enough to prevent marring on unformed surfaces, and within 2 hours after removal of forms. Make repairs required to be made to formed surfaces within the said 2 hour period; provided, however, delay any such repairs which cannot be made within the said 2 hour period until after the curing compound has been applied. When repairs are to be made to an area on which curing compound has been applied, first wet-sandblast the area involved to remove the curing compound.

5. During the curing period, do not permit traffic of any nature and do not deposit any materials, temporary or otherwise, on surfaces coated with curing compound. Foot traffic and the depositing of materials may be allowed after 3 Days if the surface is covered with 5/8-inch plywood placed over polyethylene sheets.

F. **Method 5:** This method applies to both buried slabs and walls to be backfilled.

1. Keep the concrete continuously wet by the application of water for a minimum period of at least 7 Days beginning immediately after the concrete has reached final set or forms have been removed.

2. Until the concrete surface is covered with the curing medium, keep the entire surface damp by applying water through nozzles that atomize the flow so that the surface is not marred or washed.

3. Use heavy curing mats as a curing medium to retain the moisture during the curing period. Weight or otherwise hold the curing medium substantially in contact with the concrete surface to prevent being dislodged by wind or any other causes. Continuously hold edges in place.

4. Keep the curing blankets and concrete continuously wet by the use of sprinklers or other means both during and after normal working hours.

5. Immediately after the application of water has terminated at the end of the curing period, remove the curing medium, rewet any dry spots, and immediately apply curing compound in accordance with Method 4 above.

6. Dispose of excess water from the curing operation to avoid damage to the WORK.

7. Dampproofing: Dampproof exterior surfaces of buried roof slabs and backfilled walls as follows:

   a. Immediately after completion of curing, spray the surface with a dampproofing agent consisting of an asphalt emulsion. Apply the emulsion in 2 coats. Dilute the first coat to one-half strength by the addition of water and spray on so as to provide a maximum coverage rate of 100 square feet per gallon of dilute solution. Provide a second coat of an application of the undiluted material, and spray the compound on so as to provide a maximum coverage rate of 100 square feet per gallon. Use dampproofing material indicated above.

b. As soon as the material has taken an initial set, coat the entire area thus coated with whitewash. Any formula for mixing the whitewash may be used if it produces a uniformly coated white surface and remains until placing of the backfill. If the whitewash fails to remain on the surface until the backfill is placed, apply additional whitewash.

G. The CONTRACTOR may submit alternate methods of curing which maintain the concrete in a continuously wet condition for acceptance by the ENGINEER.

3.11 PROTECTION

A. Protect concrete against injury until final acceptance.

B. Protect fresh concrete from damage due to rain, hail, sleet, or snow. Providesuch protection while the concrete is still plastic and whenever precipitation is imminent or occurring.

3.12 CURING IN COLD WEATHER

A. Water curing of concrete may be reduced to 6 Days during periods when the mean daily temperature in the vicinity of the Site is less than 40 degrees F; provided that, during the prescribed period of water curing, when temperatures are such that concrete surfaces may freeze, water curing is temporarily discontinued.

B. Concrete cured by an application of curing compound will require no additional protection from freezing if the protection at 50 degrees F for 72 hours is obtained by means of approved insulation in contact with the forms or concrete surfaces; otherwise, protect the concrete against freezing temperatures for 72 hours immediately following 72 hours protection at 50 degrees F. Protect concrete cured by water against freezing temperatures for 72 hours immediately following the 72 hours of protection at 50 degrees F.

C. Discontinue protection against freezing temperatures such that the drop in temperature of any portion of the concrete will be gradual and will not exceed 40 degrees F in 24 hours. In the spring, when the mean daily temperature rises above 40 degrees F for more than 3 Days, 72 hour protection at a temperature not lower than 50 degrees F may be discontinued for as long as the mean daily temperature remains above 40 degrees F; provided, that the concrete is be protected against freezing temperatures for not less than 48 hours after placement.

D. Where artificial heat is employed, take special care to prevent the concrete from drying. Use of unvented heaters will be permitted only when unformed surfaces of concrete adjacent to the heaters are protected for the first 24 hours from an excessive carbon dioxide atmosphere by application of curing compound; provided, that the use of curing compound for such surfaces is otherwise permitted by these Specifications.

3.13 TREATMENT OF SURFACE DEFECTS

A. As soon as forms are removed, carefully examine the concrete surface and immediately rub or grind any irregularities in a satisfactory manner in order to secure a smooth, uniform, and continuous surface. Plastering or coating of surfaces to be smoothed will not be permitted. Do not make repairs until after inspection by the ENGINEER. In no case will extensive patching of honeycombed concrete be permitted. Repair concrete containing minor voids, holes, honeycombing, or similar depression defects as indicated below. Completely remove and replace containing extensive voids, holes, honeycombing, or similar depression defects. Perform repairs and replacement prompt.

B. Cut back defective surfaces to be repair from trueline a minimum depth of 1/2-inch over the entire area. Feathered edges will not be permitted. Where chipping or cutting tools are not required in order to deepen the area properly, prepare the surface for bonding by the removal of laitance or soft material, plus not less than 1/32-inch depth of the surface film from hard portions by means of an efficient sandblast. After cutting and sandblasting, wet the surface sufficiently in advance of shooting with shotcrete or with cement mortar so that while the repair material is being applied, the surfaces underneath will remain moist but not so wet as to overcome the suction upon which a good bond depends. Use material consisting of a mixture of one sack of cement to 3 cubic feet of sand for the repair. For exposed walls, use cement containing such a proportion of Atlas white portland cement as is required to make the color of the patch match the color of the surrounding concrete.

C. Ream holes left by tie-rod cones with suitable toothed reamers so as to leave the surfaces of the holes clean and rough. Repair these holes in an approved manner with dry-packed cement grout. Do not ream holes left by form-tying devices having a rectangular cross-section, and other imperfections having a depth greater than their least surface dimension, but repair such holes in an approved manner with dry-packed cement grout.

D. Build up and shape repairs in such a manner that the completed WORK will conform to the requirements of this Section as applicable, using approved methods which will not disturb the bond, cause sagging, or cause horizontal fractures. Provide the surfaces of repairs with the same kind and amount of curing treatment as required for the concrete in the repaired section.

3.14 CARE AND REPAIR OF CONCRETE

A. Protect against injury or damage from excessive heat, lack of moisture, overstress, or any other cause until final acceptance. Take particular care to prevent the drying of concrete and to avoid roughening or otherwise damaging the surface. Repair or remove and replace concrete found to be damaged, or which may have been originally defective, which becomes defective at any time prior to the final acceptance of the completed WORK, which departs from the established line or grade, or which, for any other reason, does not conform to the requirements of the Contract Documents, with acceptable concrete.

3.15 PLACING ANCHOR BOLTS

A. Set anchor bolts in piers, bents, abutments or pedestals in an approved non shrink grout listed on the LDOTD AML (formerly QPL 47) at the location and in the manner described herein.

B. Verify the location of anchor bolts to be built into the concrete by the CONTRACTOR prior to setting. Take care to ensure proper setting of bolts. Correct inaccuracies detrimental to the structure by approved means.

C. Set anchor bolts not to be built into the concrete in preformed holes having a minimum diameter of 3 inches to allow for adjustment and deep enough to admit the anchor bolt. Holes may be formed by inserting oiled wooden plugs, metal sleeves or other approved devices into fresh concrete which are withdrawn after concrete has partially set. Adequately protect such holes from ice formation while open. When erecting the members, set members and shoes in place, then fill preformed holes sufficiently with grout so that when anchor bolts are placed to required depth, grout will completely fill holes.

D. If the CONTRACTOR elects to set anchor bolts either at initial casting or by drilling, verify the centerline-to-centerline spacing between anchor bolt holes of each member before setting the anchor bolts. If bolt holes are drilled, drill the diameter of the holes not be less than 1/2 inch larger than the bolt diameter.

E. Construct anchor bolts for cantilevered overhead signs and high mast light poles to ensure the proper performance of the double-nut anchor bolt system (baseplate sandwiched between top and bottom nuts). This requires that the bolts be set properly at initial casting, the system be constructed free of damage, and a preload be built into each anchor bolt by a specified tightening procedure. Follow the guidelines below:

1) **Inspection**: Inspect the anchor bolts for plan compliance (size and grade, bolt galvanizing, projection length, bolt pattern and orientation, etc.). Verify that the individual holes in the top template locations are not more than 1/8 inch (3 mm) misaligned from their corresponding baseplate holes. Individual bolts must not be out of plumb more than 1/8 inch per 3 feet (3 mm/m). Straightening of misaligned bolts by bending is strictly prohibited. The ENGINEER must approve any corrective action for misaligned bolts. Do not use bolts in nuts that are in a damaged condition; bring anything more than minimal effort by one worker using only a spud wrench to turn off and then back on the nuts to the ENGINEER's attention and corrected to his satisfaction.

2) **Lubrication**: After inspection of the anchor bolts is completed, clean their threads of all foreign matter and then lubricated with beeswax. If erection is delayed more than 24 hours after being lubricated, this cleaning and lubricating must be repeated.

3) **Bolt Tightening Sequence**: Erect the member and completely tighten the bolts with all cantilever elements removed. Tighten the bolts at sequence specified at each step, which calls for tightening. For an eight-bolt pattern, number the bolts 1 through 8 in a clockwise order viewed from above, beginning with bolt 1 on the side away from the heaviest cantilever element. Tighten the bolts in the sequence of 1,5,2,6,8,4,7,3. For a six-bolt pattern, number the bolts 1 through 6 in a clockwise order viewed from above, beginning with bolt 1 on the side away from the heaviest cantilever element. Tighten the bolts in the sequence of 1,4,2,5,6,3.

4) **Tightening Procedures**: Install the bottom nuts on the anchor bolts, one on each bolt. Level the top template by adjusting the bottom nuts so the template rests on each nut and the distance between the top of the concrete shaft and the bottom face of the nut is approximately 1/2 inch (13 mm). Remove the template, lubricate the bearing surfaces of the bottom nuts and washers with beeswax, and erect and plumb the structure as to the satisfaction of the ENGINEER. Adjust the bottom nuts so that each is bearing equally on its washer against the baseplate. With all cantilever elements removed and with the plumbed structure supported by crane, lubricate the bearing surfaces of the top nuts and washers and install the washers and top nuts and turn them onto the bolts so that each top nut is handtight against the washer. Using a wrench, turn the bottom nuts up in the specified sequence to a snug tight condition [snug tight is defined to be the condition where the nut is in firm contact with the baseplate, and it may be assumed that the full effort of a workman on a 12 inch (300 mm) wrench results in a snug condition].

Verify that the structure is still plumb and still supported by the crane. In the specified sequence, turn the top nuts down to the same snug tight condition.

5) Preload is induced into the bolt by tightening the nuts and measuring the tightness by turn-of-nut method. Tighten each top nut in the specified sequence 30 degrees past snug tight (one-half of a hex nut "flat"). Repeat this process of tightening each top nut an additional 30 degrees down until each top nut has been tightened 60 degrees past snug tight.

3.16 PRECAST CONCRETE

A. **Quality Control:** Show that the following quality control tests are performed as required and in accordance with the ASTM International standards indicated.

1) **Slump:** Perform one slump test for each 150 cubic yards of concrete produced per mix design, or once a day, whichever comes first. Perform slump tests in accordance with LDOTD TR 207.

2) **Temperature**: Measure the temperature of concrete when slump or air content tests are made and when compressive test specimens are made in accordance with ASTM C 1064.

3) **Compressive Strength**: Make at least four compressive strength specimens for each 150 cubic yards of concrete of each mix design in accordance with LDOTD TR 226 and LDOTD TR 227.

4) **Air Content:** Make test for air content on wet-cast concrete for each 150 cu yd of concrete, per mix design, but not less often than once each day when air-entrained concrete is used. Determine the air content in accordance with LDOTD TR 202.

5) **Density (Unit Weight):** Perform tests for density a minimum of once per week to verify the yield of batch mixes. Perform density test for each 100 cu yd of lightweight concrete in accordance with LDOTD TR 201. P density tests each 100 cubic yards of concrete per mix design, but not less often than once per day when volumetric batch equipment is used.

B. **Concrete Mixing:** Comply with Section 03901 – Portland Cement Concrete.

C. **Concrete Placement:** Comply with Section 03901 – Portland Cement Concrete and the requirements specified herein.

D. **Curing of Precast Units:** Cure precast units immediately following the initial set of the concrete and completion of surface finishing. Precast units may be cured by moisture retention (burlap) or by heat and moisture.

1) Cure concrete cured by moisture retention with wet burlap or combined wet burlap and white polyethylene sheeting and adhere to the requirements specified within this section.

2) Do not subject concrete cured by heat and steam to setam or hot air until after the concrete has attained its initial set. Apply steam within a suitable enclosure, which permits free circulation of the steam in accordance with ACI 517.2R. If hot air is used for curing, take precautions to prevent moisture loss from the concrete. Do not allow the temperature of the

concrete to exceed 150° F. These requirements do not apply to products cured with steam under pressure in an autoclave.

E. **Surface Finish**: Unless special surface finish is noted in the plans,

F. **Stripping Precast Units from Forms:** Do not remove precast units from the forms until the concrete reaches the compressive strength for stripping required by the design. If no such requirement exists, products may be removed from the forms after the final set of concrete provided that stripping damage is minimal. Routinely measure stripping strengths to ensure product has attained sufficient strength for safe handling.

G. **Patching and Repair:** No repair is required to formed surfaces that are relatively free of air voids and honeycombed areas, unless the surfaces are required by the design to be finished.

1) **Repairing Honeycombed Areas:** When honeycombed areas are to be repaired, remove all loose material and cut the area back into essentially horizontal or vertical planes to a depth at which coarse aggregate particles break under chipping rather than being dislodged. Use proprietary repair materials in accordance with the manufacturer's instructions. If a proprietary repair material is not used, saturate the aread with water. Immediately prior to repair, the area should be damp, but free of excess water. Apply a cement-sand grout or an approved bonding agent to the chipped surfaces, followed immediately by consolidating an appropriate repair material into the cavity.

2) **Repairing Major Defects:** Evaluate defects in precast concrete products which impair the functional use or the expected life of products using qualified personnel to determine if repairs are feasible and, if so, to establish the repair procedure.

H. **Shipping Precast Units:** Do not ship precast units, including piles, until the concrete strength has reached at least 75% of the specified 28-day strength, or that damage will not result, impairing the performance of the product.

I. **Installation:** Install precast concrete units to the lines and grades shown in the Contract Documents or otherwise specified. Lift units suitable lifting devices at points provided by the precast concrete producer. Install units in accordance with applicable industry standards. Upon request, provide installation instructions. Where water-tightness is a necessary performance characteristic of the precast concrete unit's end use, watertight joints, pipe-entry connectors and inserts should be used to ensure the integrity of the entire system.

- END OF SECTION –

SECTION 03806 – REINFORCEMENT

PART 1 -- GENERAL

1.1 THE REQUIREMENT

A. Provide reinforcing steel for Portland cement concrete, complete and in place, in accordance with the contract documents.

1.2 CONTRACTOR SUBMITTALS, SAMPLING, AND TESTING

A. Provide submittals, samples for testing, and testing of materials in accordance with Section 01010 – Summary of the Work and General Requirements and Section 01030 – Submittals, Sampling and Testing Plan.

B. Materials proposed for and utilized in the WORK will be sampled as indicated in herein. The frequency of testing may be altered at the discretion of the ENGINEER. Provide all materials required for testing at no additional cost to the OWNER.

1.3 REFERENCE STANDARDS

A. *American Association of State Highway and Transportation Officials (AASHTO)*

AASHTO M 284	*Standard Specification for Epoxy Coated Reinforcing Bars*

B. *American Welding Society (AWS)*

AWS D1.4	*Structural Welding Code – Reinforcing Steel*

C. *ASTM International (ASTM)*

ASTM A615	*Standard Specification for Deformed and Plain Carbon – Steel Bars for Concrete Reinforcement*
ASTM A996	*Standard Specification for Rail – Steel and Axle – Steel Deformed Bars for Concrete Reinforcement*
ASTM A1064	*Standard Specification for Carbon – Steel Wire and Welded Wire Reinforcement, Plain and Deformed, for Concrete*

D. *Concrete Reinforcement Steel Institute*

Manual of Standard Practice

E. *Louisiana Department of Transportation and Development (LDOTD)*

AML	*Approved Materials List*

PART 2 -- PRODUCTS

2.1 REINFORCING STEEL

A. Comply with the following unless otherwise specified. Use Grade 60 reinforcing steel in structures. Grade 40 steel may be used in Portland cement concrete pavement. Bars

smaller than No. 3 need not be deformed. Use deformed bars complying with items 1, 2, or 3 below. Size W 5 wire complying with item 4 below may be used in lieu of bars smaller than No. 3.

1) Billet-Steel Deformed and Plain Bars: Comply with ASTM 615 and use steel produced at a mill listed on the LDOTD AML (formerly QPL 71).

2) Rail-Steel and Axle-Steel Deformed and Plain Bars: Comply with ASTM A 996.

3) Cold-drawn Steel Wire: Comply with ASTM A 1064.

4) Welded Steel Wire Fabric: Conform to ASTM A 1064.

5) Epoxy Coated Reinforcing Steel and patching materials: Comply with AASHTO M 284 and use material listed on the LDOTD AML (formerly QPL 51).

2.2 SPIRAL REINFORCING

A. Comply with any of the following:

1) Billet-Steel Deformed and Plain Bars: Comply with ASTM 615 and use steel produced at a mill listed on the LDOTD AML (formerly QPL 71).

2) Rail-Steel and Axle-Steel Deformed and Plain Bars: Comply with ASTM A 996.

3) Cold-drawn Steel Wire: Comply with ASTM A 1064

4) Welded Steel Wire Fabric: Conform to ASTM A 1064.

2.3 TIE BARS

A. Grade 40 steel may be used in Portland cement concrete pavement. Use tie bars which comply with any of the following:

1) Billet-Steel Deformed and Plain Bars: Comply with ASTM 615 and use steel produced at a mill listed on the LDOTD AML (formerly QPL 71).

2) Rail-Steel and Axle-Steel Deformed and Plain Bars: Comply with ASTM A 996.

3) Cold-drawn Steel Wire: Comply with ASTM A 1064.

PART 3 -- EXECUTION

3.1 FABRICATION

A. **Fabrication:** Unless otherwise authorized, cold bend bent reinforcing to the shapes shown on the plans in accordance with the following requirements:

1) **Bending:** Bend stirrups and ties around a pin having a diameter of at least four bar diameters for No. 5 or smaller bars, and at least five bar diameters for larger bars. Bend all other bars, except as otherwise

specified herein, around a pin having a diameter as specified in the table below:

Pins for Bar Bends

Bar Size	Minimum Pin Diameter
Nos. 3 through 8 (Nos. 10 M through 25 M)	6 bar diameters
Nos. 9, 10 and 11 (Nos. 29, 32 and 36 M)	8 bar diameters
Nos. 14 and 18 (Nos. 43 M and 57 M)	10 bar diameters

No rebending of bars will be allowed. Special fabrication will be required for bending Nos. 14 and 18 bars more than 90 degrees.

2) **Tolerances:** Fabricate bars in accordance with the tolerances specified in the figure below. All dimensions given in the figure below are out-to-out of bars.

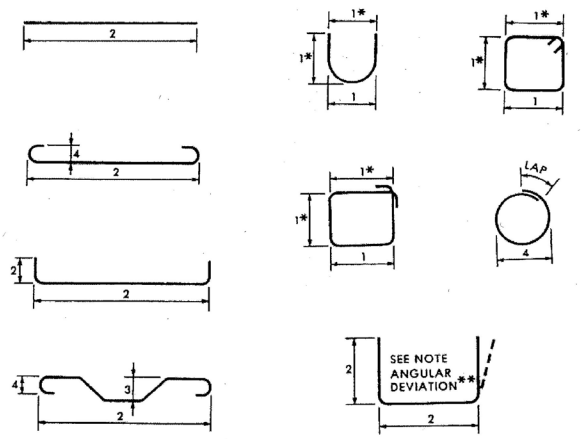

Symbol	Tolerance, Inches (mm)
1	±1/2 (± 13)
2	± 1 (± 25)
3	+0, -1/2 (+0, -13)
4	± 1/2 (±13)

*Not to differ for opposite parallel dimension by more than 1/2 inch (13 mm).
**Angular Deviation-Maximum ± 2 1/2° or ± 1/2 inch/ft. (40 mm/m), but not less than 1/2 inch (13 mm).

3) **Shipping:** Ship bar reinforcement in standard bundles, tagged and marked in accordance with the Manual of Standard Practice of the Concrete Reinforcement Steel Institute (CRSI). Use tags made of durable material and marked in a legible manner with waterproof markings. Provide at least one tag per bundle attached by wire. Ensure that tags show the size of reinforcing, number of pieces, and mark or length of bars.

4) **Handling and Coating Repairs:** Handle epoxy coated reinforcing steel in a manner to avoid damage to the coating. Pad bundling bands. Lift bundles with multiple supports or strongbacks to prevent abrasion to the coating due to sag. Use the same patching material used by the applicator. Use prequalified patching material. Make repairs in accordance with the patching material manufacturer's recommendations. Repairs to the coating will be required on all damaged areas larger than 1/4 inch square. The total bar surface area covered by patching material may not exceed 2 percent. Coat ends of coated bars cut during field

fabrication with the patching material before rusting appears; however, the coated ends are not to be included in the 2 percent maximum coverage of patching material. Hairline cracks without bond loss or other minor damage on fabrication bends need not be repaired.

3.2 PROTECTION OF MATERIAL

A. Store reinforcing material above ground on platforms, skids or other supports. Protect steel from damage and corrosion.

B. Plainly mark and tag various sizes, grades and lengths to facilitate inspection.

C. Unload and store epoxy coated bars on the project site in a manner to avoid damage or contamination. Store bars off the ground and cover the bars such that formation of condensation and exposure to ultraviolet light is avoided.

3.3 PLACING AND FASTENING

A. Place reinforcement in the position shown on the plans and firmly hold reinforcement in place during placing and setting of concrete. Prior to placing reinforcing in the forms, clean the reinforcement of all dirt, loose rust, loose scale, paint, oil, grease, form release agent, or other foreign material. Thin powdery rust and light rust need not be removed. Tie bars with No.14 or 16 gage wire at all intersections, except where spacing is less than 1 foot in each direction, tie alternate intersections of the bars.

B. Maintain distance of reinforcement from forms by metal chairs, ties, hangers or other approved supports. Precast mortar or concrete blocks may be used when approved by the ENGINEER in applications where concrete is to be cast against soil. Use hot-dipped galvanized, electroplated with zinc (GS Grade), plastic-coated or stainless steel chairs where in contact with surfaces of concrete. Separate layers of bars by approved devices. The use of pebbles, pieces of broken stone or brick, metal pipe and wooden blocks will not be permitted. Pass vertical stirrups around main tension members and securely attach the reinforcing to each other. Place bars as to provide the minimum covering, measured from the surface of concrete to face of reinforcing bars, as indicated in the table below. The ENGINEER will inspect reinforcement. Reinforcement is subject to approval before placing concrete.

Condition	***Required Clear Cover, Inches***
For concrete placed against earth	3 inches
For surfaces in contact with water	2 – ½ inches
For formed surfaces in contact with earth	2 inches
For underside of slabs over water, beams, and columns not in contact with water or earth	2 inches

Paving concrete	As indicated on plan details or as per pavement specifications
All other surfaces	2 inches

C. During and after installation of epoxy coated bars, repair all significant cuts, nicks and abraded places in the coating on the bars with the epoxy repair material supplied by the epoxy resin manufacturer. Repair damaged metallic accessories with a suitable material. No more than 0.25 percent of the bar surface area may be left bare.

D. Repair damaged areas of the reinforcing steel and accessories before rusting occurs. Clean coated bars of dirt, paint, oil, grease, form release agent, or other foreign substances prior to incorporating the coated bars into the WORK. Perform placement of concrete in a timely manner with methods and equipment which will not damage the coated materials.

E. Since the epoxy coating is flammable, do not expose coated bars to fire or flame. Cutting coated bars by burning will not be permitted. Do not field bend coated reinforcing steel to be partially embedded in concrete unless specified on the plans or permitted by the ENGINEER.

3.4 SPLICING

A. Furnish reinforcement in the full lengths indicated on the plans. Splicing of bars, except where shown on the plans, will not be permitted without written approval. Stagger splices as far as possible. Unless otherwise specified, lap bars in accordance with the requirements of the table below. Do not make construction joints within the limits of lapped bars. In lapped splices, place bar in wire bars together in such manner as to maintain the minimum clear distance to other bars and to the surface of concrete. Weld reinforcing steel only if detailed on the plans or if authorized in writing. Where welding reinforcement, comply with the latest edition of AWS D1.4.

Lap Splice Length for Grade 60 Steel

Bar No.	Lap Splice Length, Inches
No. 3	18
No. 4	24
No. 5	30
No. 6	39
No. 7	53
No. 8	69
No. 9	88
No. 10	111

No. 11	137

B. When permitted in the plans or specifications, reinforcing steel splices may be made by an approved mechanical butt splicing device listed on the LDOTD AML (formerly QPL 44) and used in accordance with the manufacturer's recommendations. Use splices that develop at least 125 percent of the specified yield strength of the reinforcing steel bars in tension.

3.5 SUBSTITUTIONS

A. Substitutions of different size bars will be permitted with authorization of the ENGINEER. Provide substitute steel with cross-sectional and surface areas equivalent to the design areas or larger. Allowed substitutions will be made at no additional cost to the OWNER.

- END OF SECTION –

SECTION 03901 – PORTLAND CEMENT CONCRETE

PART 1 -- GENERAL

1.1 THE REQUIREMENT

A. Provide Portland Cement Concrete, complete and in place, in accordance with the contract documents.

B. Structural Concrete is designated by class and pavement concrete is designated by type.

C. Provide mixtures of an approved mix design and use a Louisiana Department of Transportation and Development certified plant. Transport concrete using Louisiana Department of Transportation and Development certified trucks.

D. Assume full responsibility for the design, control, and transportation of concrete mixtures in accordance with these specifications.

1.2 REFERENCE STANDARDS

A. *Louisiana Department of Transportation and Development (LDOTD)*

AML Approved Materials List

1.3 CONTRACTOR SUBMITTALS, SAMPLING, AND TESTING

A. Provide submittals, samples for testing, and testing of materials in accordance with Section 01010 – Summary of Work and General Requirements and Section 01030 – Submittals, Sampling and Testing Plan.

B. Materials proposed for and utilized in the WORK will be sampled as indicated in herein. The frequency of testing may be altered at the discretion of the ENGINEER. Provide all materials required for testing at no additional cost to the OWNER.

1.4 QUALITY ASSURANCE

A. Assume full responsibility for quality control of materials during handling, proportioning, mixing, and placing operations.

B. Furnish a Certified Concrete Technician at the plant or job site to make adjustments in batch weights for moisture content, to perform necessary adjustments in proportioning materials, and to perform tests necessary for control of the concrete mix within specification requirements. Do not begin daily plant operations until the Certified Concrete Technician has determined that gradations and batch weight adjustments are within specification limits. Use the Certified Concrete Technician or the Authorized Concrete Field Tester to perform the job-site control tests for slump, air content, mix temperature, and then report the documented results to the contractor. The use of an Authorized Concrete Field Tester will not relieve the Certified Concrete Technician from performing the remaining duties as outlined in these specifications.

C. Use a Certified Concrete Technician and Authorized Concrete Field Tester having completed the requirement training prescribed by the Louisiana Department of Transportation and Development. Personnel with a current ACI Concrete Field Testing Technician Grade I certification qualify as an Authorized Concrete Field Tester.

D. **Mix Design:** Submit a mix design on an approved form showing details for concrete to be furnished. Do not start work until the concrete mix design has been accepted by the ENGINEER. Review and acceptance of this mix design does not release the contractor from the responsibility of producing concrete that minimum requirements of the specifications. Proportion the volume of coarse aggregates in concrete meets the mixes in accordance with the Master Proportion Table for Portland Cement Concrete below. This does not apply to mixes for concrete pipe, Types B and D pavement, and minor structure class concrete. Fine aggregate must have fineness Moduli (FM) between 2.20 and 3.00. For an example of proportioning of coarse aggregate, see the LDOTD publication entitled Application of Quality Assurance Specifications for Portland Cement Concrete Pavement and Structures.

Nominal Maximum Size of Aggregate	**Volume of Dry – Rodded Coarse Aggregate per Unit Volume of Concrete for Different Fineness Moduli of Fine Aggregate**				
	2.20	**2.40**	**2.60**	**2.80**	**3.00**
3/8 Inch	0.52	0.50	0.48	0.49	0.44
½ Inch	0.61	0.59	0.57	0.55	0.53
¾ Inch	0.6	0.66	0.64	0.62	0.60
1 Inch	0.73	0.71	0.69	0.67	0.65
1 – ½ Inch	0.77	0.75	0.73	0.71	0.69
2 Inch	0.80	0.78	0.79	0.74	0.72
3 Inch	0.84	0.82	0.80	0.78	0.76

1. Proportion aggregates for pavement Types B and D mixes in accordance with Section 02003 – Aggregates.

2. Perform trial mixes to demonstrate the mix's performance and the compatibility of components.

3. Submit test results for slump, unit weight, air content, set times, and surface resistivity (i.e., permeability) when required. Develop a curve for compressive strength (flexural strength for pavements if required) at 3, 7, 14, and 28 days. All trial mixes, especially those incorporating ASTM C494 Type S admixtures, must demonstrate their intended specific use and compliance with this section to the ENGINEER. Submit these findings to the ENGINEER for all precast and prestress elements.

4. Furnish materials to the ENGINEER for verification of trial mixes as requested.

5. The ENGINEER may waive the requirement for trial mixes, in writing, where in the opinion of the ENGINEER sufficient information is provided by the CONTRACTOR to substantiate historical performance of the submitted mix. Waiver of trial mixes does not release the CONTRACTOR from the responsibility of producing concrete that meets the minimum requirements of the specifications.

6. Ensure that slumps are within the ranges shown in Table 03901-3 when tested in accordance with DOTD TR 207. The ENGINEER may authorize an increase in maximum slump, without mix segregation, by use of water reducing admixtures. Formulate mixes to produce concrete that, when molded and cured in accordance with DOTD TR 226 and tested in accordance with DOTD TR 230, show an average compressive strength not less than shown in Table 03901-3.

E. **Quality Control Tests:**

1. Conduct tests to confirm the mix complies with the accepted mix design. Determine gradation and moisture content of aggregates used in the concrete mixture. Test the mixture at the job site for slump, unit weight, temperature, and air content. Keep mix variations within specified control limits for individual samples. Plot test results for gradation, slump, unit weight, and air content on control charts for individual samples. Submit these control charts to the ENGINEER.

2. Monitor admixtures, cementitious the mix chemical materials components (cementitious materials, chemical additives, and aggregates) for variations. As and chemical admixture shipments arrive, verify slump, air content, and initial set time by testing at ambient temperatures. Adjust the mix design to rectify any changes, which would adversely affect constructability, concrete placement, or compliance with the specifications. Document the testing to validate component consistency on the control charts. Note conformance or variation in mix parameters (workability, set times, air content, etc.) on the control charts. Provide a copy of the proposed testing plan to the ENGINEER for record. Acceptance of the plan does not relieve the contractor of the responsibility for satisfying specifications.

3. Select times to obtain control test samples using random number tables in accordance with DOTD S 605 or by random selection. Conform to gradation control limits of aggregates as shown in Section 02003 – Aggregates.

4. Use the LDOTD Materials Sampling Manual to determine the minimum number of quality control tests for structural and pavement concrete. Take additional test samples as directed for slump, concrete temperature, and air content.

5. For minor structure concrete only, a Certified Concrete Technician or Authorized Concrete Field Tester will not be required. However, implement a quality control testing program to ensure that the concrete meets the requirements of these specifications.

6. When producing concrete for Types B and D pavements, determine gradations daily on each stockpile of aggregates. Base all gradation calculations on percent of dry weight. Upon determination of the gradation of each stockpile, mathematically determine the percent of the total aggregates retained based on the proportions of the combined aggregate blend, and check for conformance with Section 02003 – Aggregates. For additional QC requirements for Mass Concrete, see Part 3 of this Section 03901 – Portland Cement Concrete.

7. It is permissible to adjust the ratio of fine to coarse aggregates of the approved mix design by no more than 5 percent.

8. Never adjust to materially affect the volume of concrete. For mixtures incorporating the Type B or D gradation, if the proportions of the aggregate sizes used do not satisfy the gradation requirements of Section 02003 - Aggregates due to changes in the gradation, adjust the proportions to bring the combined aggregates back within

specification limits. These minor adjustments for gradation will not require a new mix design. Ensure that the mix produced is uniform, workable and within the specification limits of Table 03901-3. When plant operations do not produce a uniform and workable mix, cease plant operations and take corrective action prior to restart.

9. When slump, air content, concrete temperature, or gradation measurements, as plotted on control charts, uniform and may fall outside tolerance indicate that the mix is not limits, immediately make adjustments to keep the mix within specified limits. Failure to make proper adjustments or the mix deviates from specification requirements, or the mix is obviously defective, the ENGINEER will reject the mix.

10. Do not change sources of any materials or percentages of cementitious materials, until a new Mix Design showing the new material or adjusted proportions has been accepted.

F. **Acceptance and Verification for Type B and D Portland Cement Concrete Pavement:** Use the LDOTD Materials Sampling Manual to determine sampling and testing requirements for acceptance and verification for concrete for Types B and D pavements, except as follows:

1. Gradation testing of individual stockpiles for acceptance will not be required.

2. Verification tests, performed by the ENGINEER or Testing Laboratory to assure conformance to the combined aggregate gradation shown in Section 02003 - Aggregates, are at the frequency of one sample every five days of production.

3. Upon determination of the gradation of each aggregate size sampled, mathematically determine the percent retained based on the dry weight of the total combined aggregates based on the proportions of the combined aggregate blend, and check for conformance with Section 02003 - Aggregates.

4. If the results of the verification sample indicate that, the combination of aggregates does not meet the requirements of Section 02003 – Aggregates, resample the aggregates, and test again.

5. If the results of the second verification sample indicate that the combination of aggregates does not meet the requirements of Section 02003 - Aggregates, adjust operations to produce a mix meeting these specifications. The ENGINEER will investigate and compare verification results to quality control results, for the same period, to determine appropriate action.

1.5 DELIVERY, STORAGE, AND HANDLING:

A. Comply with the requirements of Part 3 – Execution of this Section 03901 – Portland Cement Concrete and the requirements below.

B. **Transportation and Storage of Cementitious Materials:** Transport cementitious materials in watertight conveyances and store in separate dry facilities. Reject material that is contaminated, partially set, or contains lumps of caked material. Do not mix brands, mills, types, grades, or classes unless authorized by the ENGINEER. The ENGINEER may waive this requirement in case of plant breakdown during production to allow concrete, conforming to the requirements of this Section 03901 – Portland Cement Concrete, furnished from another plant to finish a placement in progress.

C. **Handling and Storage of Aggregates:** Stockpile aggregates so that no detrimental degradation, contamination or segregation of aggregates results. Do not incorporate any foreign material into the aggregates. Provide a positive separation between natural ground and stockpile. Do not intermingle individual stockpiled materials. Do not add material to working faces of the stockpiles during continuous operations. Maintain drainage of stockpiles to control moisture content. Control aggregates to maintain the required gradation. Do not use aggregates that have become segregated or contaminated.

PART 2 -- PRODUCTS

2.1 GENERAL

A. Use cement, fly ash, ground granulated blast-furnace slag, and microsilica (silica fume) certified by the manufacturer in accordance with current LDOTD procedures.

B. Maintain accurate records of cement, fly ash, ground granulated blast-furnace slag, and silica fume deliveries and their use. Furnish copies of these records to the ENGINEER in such form as required.

C. **Mixture Substitutions:** In accordance with Table 03901-2, these are the allowable mixture substitutions:

Structural Class	**Substitute**
A1	**No Subsititutions**
A2	**No Substitutions**
A3	**No Substitutions**
P1	**P2, P3**
P2	**P3**
P3	**No Substitutions**
S	**No Subtitutions**
MASS (A1)	**No Subtitutions**
MASS (A2)	**No Substitutions**
MASS (A3)	**No Subtitutions**
Minor Structure Class	
M	**A1, B, D**
R	**A1, B, D**
Pavement Type	

B	**D**
D	**B**
E	**No Substitutions**

2.2 COMPOSITION OF CONCRETE

A. Provide the type of cement and Portland cement concrete composed of components as specified in this Section 03901 – Portland Cement Concrete and Table 03901-3. For mix designs not conforming to the requirements of this Section 03901 or Table 03901-3, the approval of the ENGINEER is required.

B. **Cement:** Allowable types of cement are as follows:

Use	**Allowable Cement Types**
General Construction	Type I and/or Type II Portland Cement; Blended Hydraulic Cement, Type IL Portland lime cement
Concrete Pavement	Type I and/or Type II Portland Cement; Blended Hydraulic Cement, Type IL Portland Lime Cement, Type III Cement for High Early Strength Applications Only
Sewer Structures	Type I/II Portland Cement; Blended Hydraulic Cement, Type IL Portland Lime Cement, Type III Cement for High Early Strength Applications Only
Pre – Stressed or Pre – Cast Concrete	Type III Portland Cement; Blended Hydraulic Cement; Type IL Portland Lime Cement

C. **Cementitious Material Substitution:**

1. For structural classes of concrete, fly ash conforming to Part 2 of this Section 03901 – Portland Cement Concrete may be partially substituted for Portland cement on a pound for pound basis. For purposes of cement material substitution with fly ash and slag, do not treat Type IL cement as blended.

2. A binary concrete mix is one that combines Portland cement and one additional cementitious replacement, e.g., ground granulated blast furnace slag (GGBFS) or fly ash (class C or F).

3. A ternary concrete mix is one that combines Portland cement with two additional cementitious replacements, e.g., GGBFS and fly ash (class C or F) or fly ash (both class C and F).

4. The maximum substitution rate for binary mixtures is 30 percent fly ash or 50 percent GGBFS.

5. The maximum substitution rate for ternary mixtures containing Type I, II, III, or 1L Portland cement is 70 percent of cement. When using Type IP or IS Portland cement, the maximum substitution rate for ternary mixtures is 40 percent. Ternary combinations using both class C and F fly ash are allowable. When using fly ash ternary mixtures, replace Portland cement with class C and class F fly ash in equal amounts. When using combinations of GGBFS and fly ash, the amount of GGBFS must be equal to or greater than the amount of fly ash.

6. For pavement types of concrete (Types B and D), the maximum substitution rate for ternary mixtures is limited to 50 percent of cement and for binary mixtures is 30 percent fly ash or 50 percent GGBFS.

7. The use of Type III Portland cement outside of the specified allowances for precast, prestress, and specified HES pavements requires the approval of the ENGINEER.

D. Chemical Admixtures:

1. Only use admixtures listed on the Approved Materials List.

2. Use an air-entraining admixture in all concrete. Test the total air content of the concrete in accordance with DOTD TR 202, and meet the requirements specified in Table 03901-3.

3. Use set-retarding admixtures in an amount sufficient to produce the necessary retardation. Consider the influence of different materials and job conditions, including local weather on setting characteristics.

4. Include the amount of water incorporated in admixtures as a part of required mixing water.

5. Follow manufacturer's recommendations for adding and mixing high range water reducers (HRWR, superplasticizer) to the mix.

6. When using multiple admixtures, ensure the same company manufactures all the admixtures, and they are all compatible.

E. Water: Ensure that the total amount of water in the mixture, including admixtures and free water, does not exceed the maximum water- cementitious ratio specified in Table 03901-3. Free water includes all water entering the mix with the aggregates, except water absorbed by the aggregate.

F. Aggregates: Ensure that all aggregates for use in Portland cement concrete meet the requirements of Section 02003 – Aggregates.

G. Fine Aggregates: Ensure that fine aggregates comply with the requirements of Section 02003 – Aggregates.

H. Course Aggregates: Ensure that coarse aggregates are the grade specified in Table 03901 – 3 and comply with Section 02003 – Aggregates.

2.3 PORTLAND CEMENT

A. Use Portland cement from the Approved Materials List complying with AASHTO M 85. Alkali content calculated as sodium oxide equivalent may not exceed 0.60 percent by weight.

2.4 BLENDED HYDRAULIC CEMENT

A. Use blended hydraulic cement Type IP, Type IS, or Type IL from the Approved List and comply with AASHTO M 240. The alkali content of blended hydraulic cement calculated as sodium oxide equivalent may not exceed 0.60 percent by weight. Type IP may contain up to 30 percent by weight of fly ash or up to 30 percent by weight of bottom ash, provided that the bottom ash is inter-ground with the cement clinker. Fly ash and bottom ash must comply with AASHTO M 295, Class C or F. Type IS cement may contain up to 50 percent by weight of ground granulated blast-furnace slag. Grade 100 and Grade 120 ground granulated blast-furnace slag (slag cement) must comply with AASHTO M 302. Do not treat Type IL Portland limestone cement as blended cement for purposes of cement material substitution with fly ash and slag.

2.5 MASONRY CEMENT AND MORTAR CEMENT

A. Comply with ASTM C91 for masonry cement. Comply with ASTM C1329 for mortar cement. Mix mortar cement in accordance with ASTM C270 or use pre-blended dry mortar cement complying with ASTM C1714 and mix according to the manufacturers' recommendations

2.6 AGGREGATES

A. Use aggregates complying with the requirements of Section 02003 – Aggregates.

2.7 ADMIXTURES

A. Use admixtures listed on the LDOTD AML.

2.8 WATER

A. Use water human consumption or in compliance with the following when tested in accordance with AASHTO T 26:

Contaminant	Maximum Allowable Percent by Weight
Alkali	0.1
Organic Solids	0.1
Inorganic Solids	0.4
Salt	0.5
Sugar, Oil, or Acid	0.0

2.9 FLY ASH

A. Use fly ash from the Approved Materials List. Comply with AASHTO M 295 for Class C and Class F. Comply with ASTM C618 for Class N. Alkali content calculated in accordance with DOTD TR 531 may not exceed 2.5 percent

2.10 GROUND GRANULATED BLAST – FURNACE SLAG (GGBFS)

A. Use Grade 100 or Grade 120 ground granulated blast-furnace slag from the Approved Materials List and comply with AASHTO M 302.

2.11 MICROSILICA

A. Use microsilica (silica fume) from the Approved Materials List and comply with AASHTO M 307.

PART 3 -- EXECUTION

3.1 SAMPLING AND TESTING

A. Perform sampling and testing in accordance with the LDOTD "Materials Sampling Manual and Testing Procedures Manual". Furnish necessary materials for testing at no additional cost to the OWNER. For pumped concrete, sample at the discharge end of pump.

3.2 EQUIPMENT

A. Provide sufficient plant capacity and transporting equipment to ensure delivery at the required rate. Ensure that the rate of delivery provides for proper handling, placing and finishing of concrete and maintains a workable surface. Ensure that methods of delivering and handling concrete facilitate placing with a minimum of rehandling and without damage to the structure or concrete.

B. **Plant Equipment:** Ensure that batch plants include approved storage, weigh hoppers, and measuring devices. Properly seal and vent equipment to minimize contamination, dusting and loss of material. Ensure uniform distribution of the incorporated materials. Provide adequate water supply and a device for automatically controlling the amount of water used in each batch. Provide communication between the concrete batcher and loader operator

1. **Direct Fill Elevating Weigh Hoppers:** For plants using direct-fill elevating weigh hoppers, use computer controlled lights as an indicator of aggregate weights, but not as the sole means of control for aggregate proportioning. Provide means of control so that, as approaching the quantity desired in the weigh hopper, material may be added slowly and shut off with precision. Ensure that weigh hoppers eliminate accumulation of materials and discharges completely. Make provisions for removal of overloads.

2. **Storage Bins and Silos:** For plants with storage bins, ensure that the bins have adequate separate compartments for each size of aggregate. Design each compartment to discharge efficiently and freely. Provide a means of control so that, as approaching the quantity desired in the weigh hopper, material may be added slowly and shut off with precision. Ensure that silos are weatherproof, sealed, free of holes, and prevent contamination. Ensure complete separation for each cementitious material. Design silos to freely discharge and equip with vibrators

and/or aerators to maintain flow of material and prevent accumulation. Provide silos with a positive means of shut off without leaking into the weigh hopper

3. **Measuring Devices:** Equip batch plants to proportion materials by approved weighing/metering devices. Moisture probes are allowed to determine the moisture content of aggregates for batch adjustment, provided the accuracy is within 0.5 percent of the results obtained by the Certified Concrete Technician in accordance with DOTD TR 106 and confirmed by the ENGINEER. Use separate scale systems: one for aggregates, and another for cementitious materials. Weigh each size of aggregate from separate bins either individually or cumulatively. Weighing each cementitious material cumulatively in the same hopper is allowable but measure the weight of the cement first before other cementitious materials. Ensure that weigh hoppers eliminate accumulation of materials and discharge completely. Make provisions for removal of overloads. Ensure that scales are accurate to 0.5 percent throughout the range of use. Use scales graduated to 0.1 percent of the rated scale capacity. When beam type scales are used, ensure that poises are lockable into any position to prevent accidental change of position, and the weigh beam and a telltale device is in view of the operator. Plant measuring devices are be subject to approval by the ENGINEER. Ensure that scales are tested, inspected, and certified every 90-calendar days by a qualified independent scale service or the Weights and Measures Division of the Louisiana Department of Agriculture and Forestry at no cost to the OWNER and more frequently when the ENGINEER deems it necessary to assure their accuracy. Use a qualified independent scale service or the Weights and Measures Division of the Louisiana Department of Agriculture and Forestry to certify the plant's laboratory-measuring devices annually at no direct cost to the OWNER. Batch individual aggregates within 2 percent, and the cumulative total weight of aggregates within 1 percent of the required weight. Ensure that cementitious materials are within 1 percent of the required weight. For smaller batches of 1 to 3 cubic yards, the quantity of cement and cumulative quantity of cementitious materials may be neither less than the required amount nor more than 4 percent in excess. Cement in standard bags need not be weighed; however, furnish in full bag increments and adjust the quantities of other materials accordingly. Do not use bagged fly ash or GGBFS. Measure the mixing water by volume or weight. Ensure that water measuring devices are accurate to 1 percent at 1/2 the maximum allowable water per batch and the maximum graduation is 1 gallon. Use approved methods and equipment for adding admixtures into the batch. Measure the quantity of admixtures with an accuracy of 3 percent. Provide a separate dispensing device for each admixture.

4. **Batch Tickets:** Certified concrete plants may be equipped with an approved automatic ticket printer system for recording required batching information. Enter actual weights of material batched each time on the Batch Certification Report or an approved electronic document. When an automatic ticket printer system is not used, determine quantities and batching information by visual observation. Record these quantities on the Batch Certification Report. Ensure that the approved ticket printer system is tamper-proof and prints time of batching, amount of water, batch weights, moisture content of aggregates, and quantities of admixtures. The Certified Concrete Technician may add moisture content of aggregates or quantities of admixtures to the printed ticket when the automatic system does not have these capabilities. During a printer breakdown, determine quantities by visual observation and certify as stated above. Ensure that all records of batches show batch number, day, month, year, and time of day to the nearest minute for each batch. Record any added water on the Batch Certification Report Provide to the ENGINEER, a legible copy of all batch records identified with lot number and mix design number.

C. **Hauling Equipment:** Ensure that hauling equipment is watertight and capable of discharging concrete at a controlled rate without segregation.

1. **Truck Mixer:** Provide revolving-drum truck mixers, equipped with tanks for carrying any additional portion of the mixing water and capable of dispensing to the nearest gallon. Replace pick-up and throwover blades in the mixing drum when worn beyond the limit recommended by the manufacturer. Have available a copy of the manufacturer's design, showing dimensions and arrangements of blades in reference to original height and depth. Equip truck mixers with electrically or mechanically actuated revolution counters. Locate counters to provide safe and convenient inspection. In a prominent place, attach to each truck mixer a metal plate on which is plainly marked the maximum rated capacity of the drum in terms of concrete volume and rotation speed for both agitating and mixing speeds.

2. **Agitator Hauling Equipment:** Furnish agitators with blades or paddles to effectively agitate the mix and prevent segregation. Provide covers when directed. Attach to each agitator in a prominent place, a metal plate on which is plainly marked the designed uses for the equipment, the maximum rated capacity in terms of concrete volume, and agitation speed.

3. **Non Agitator Hauling Equipment:** Ensure that the bodies of non-agitating hauling equipment are clean, smooth, metal, and mortar-tight containers. Provide covers when directed.

4. Portable Mixers: Provide portable mixers with a minimum capacity of one cubic yard and capable of accurately and uniformly mixing and discharging concrete without segregation.

3.3 BATCHING AND MIXING

A. Thoroughly mix concrete in a mixer of an approved size and type, which will ensure uniform distribution of materials throughout the mix.

B. Do not use mixers with worn blades or excessive build-up. Replace pickup and throw-over blades or mixing paddles in the mixing drum or mixing unit when worn beyond the limit recommended by the manufacturer. Have available a copy of the manufacturer's design, showing dimensions and arrangements of blades in reference to original height and depth. Begin mixing operations within 15 minutes after addition of cement to the aggregates. When there is an interruption to the mixing operations, thoroughly clean the mixer. Remove the entire contents of the mixer from the drum before placing materials for a succeeding batch. Add a portion of mixing water in advance of cement and aggregates. Do not use a mixer having a rated capacity of less than one cubic yard or charge a mixer in excess of its rated capacity. Do not produce batches smaller than one cubic yard.

C. **Central Plant and Site Mixing:** Mix concrete until uniformity is achieved but not less than 60 seconds. Mixing time begins after all materials are in the mixer. Mixing time ends when the discharge chute opens. Ensure that the mixer is equipped with an approved timing device, which automatically locks the discharge lever when charging the drum and releases it at the end of the mixing period. During mixing, operate the mixer at its designed drum speed as shown on the manufacturer's nameplate on the mixer

D. **Truck Mixing:** Measure aggregates and cementitious materials for concrete and charge into the drum at the proportioning plant. Ensure that the size of the batch does not exceed the maximum rated mixing capacity as stated by the manufacturer and stamped

on a metal plate on the mixer. When using a truck mixer for complete mixing, mix each batch at designated mixing speed until uniformity is achieved, but not less than 70 revolutions. Ensure that all materials, including mixing water, are mixer drum before actuating the revolution counter or taking an reading. Ensure that any additional revolutions during transit are designated agitating speed. in the initial at the Add a minimum of 75 percent of the prescribed amount of batch water at the plant. If the slump is low at the jobsite, add up to the “maximum water that can be added at jobsite” as indicated on the Batch Certification form. Ensure that water added at the jobsite does not exceed the maximum allowable water-cementitious material ratio or exceed the maximum allowable slump by more than 1/4 inch. Reject the load if these criteria are exceeded. Add water and/or admixtures at the job site in one or two increments with additional mixing within the range of 20 to 30 revolutions at designated mixer speed for each increment. When adding to a partial load, add only a proportional amount of water or admixtures. Follow the manufacturer’s recommendations when adding and mixing admixtures to the mix. Perform slump, air, temperature, and unit weight tests, and mold cylinders after the addition of all components into the mix

E. **Partial Mixing at Central Plant (Shrink Mixing):** When partially mixing at a central plant, reduce the mixing time to a minimum of 30 seconds. Complete required mixing in a truck mixer at mixing speed until uniformity is achieved but not less than 10 revolutions.

F. **Time Limitations:** Ensure that the maximum time from the addition of cement to the mix to final placement of the concrete is 90 minutes or a maximum of 300 revolutions, whichever occurs first. When transport is by non-agitator truck, ensure that the maximum time from the addition of cement to the mix to final ENGINEER may reduce the conditions contributing to concrete. placement maximum rapid loss of the concrete is 45 minutes. The allowable time for any observed of plasticity or uniformity of the For special applications, the stated time limitations may be modified based on trial batch results.

G. **Hauling Equipment:** Transport fresh concrete in a truck mixer, agitator, or other certified equipment. Non-agitator trucks are only allowed for pavement concrete. Ensure that the volume of mixed concrete transported in an agitator truck at agitation speed is in accordance with the manufacturer's specified rating.

H. **Portable Mixing:** Obtain written approval from the ENGINEER to use portable or volumetric mixers for PCCP patching and minor structure concrete.

I. **Delivery:** Provide sufficient plant capacity and transporting equipment to ensure delivery at the required rate. Ensure that methods and rate of delivery and handling of concrete facilitate placement, without damage to the structure or fresh concrete.

3.4 WEATHER AND TEMPERATURE LIMITATIONS

A. Concrete used in precast/prestress structural elements may be exempt from the following temperature limitations at the determination of the Construction Fabrication ENGINEER. Prepare for rain and hot or cold weather concrete placement well in advance of these events.

B. The contractor is responsible for proper mixing, placing, and curing of all concrete. At no cost to the OWNER, remove and replace any unacceptable concrete as determined by the ENGINEER.

C. **Cold Weather Limitations:** Do not place concrete when the internal temperature of the concrete is below 45°F nor on frozen subgrade or into forms that are below 32°F.

1. Portland Cement Mixes: Discontinue concreting operations when a descending air temperature at the jobsite, in the shade, and away from artificial heat, reaches 35°F or NOAA forecasts the temperature to be less than 32°F within the 24-hour period following placement. Do not resume PC concreting operations until an ascending air temperature at the jobsite, in the shade, and away from artificial heat, reaches 32°F; provided the high temperature forecasted by NOAA is above 35°F and remains above 32°F for a minimum of 24 hours.

2. Binary Mixes: Discontinue concreting operations when a descending air temperature at the jobsite, in the shade, and away from artificial heat, reaches 40°F or NOAA forecasts the temperature to be less than 35°F within the 36-hour period following placement. Do not resume concreting operations until an ascending air temperature at the jobsite, in the shade, and away from artificial heat, reaches 40°F; provided the high temperature forecasted by NOAA is above 45°F and remains above 40°F for a minimum of 36 hours.

3. Ternary Mixes: Discontinue concreting operations when a descending air temperature at the jobsite, in the shade, and away from artificial heat, reaches 45°F or NOAA forecasts the temperature to be less than 40°F within the 48-hour period following placement. Do not resume concreting operations until an ascending air temperature at the jobsite, in the shade, and away from artificial heat, reaches 45°F; provided the high temperature forecasted by NOAA is above 50°F and remains above 45°F for a minimum of 48 hours. Written authorization from the ENGINEER is required for all concrete operations outside these cold weather limitations.

D. **Hot Weather Limitations:** During hot weather concreting, it is critical to reduce the evaporation rate from concrete to minimize plastic shrinkage cracking by having an appropriate concrete mix design, placement methods, and curing operations. Furthermore, additional moisture loss precautions may be essential when other environmental conditions (i.e. relative humidity, air temperature, and wind velocity) accelerate water evaporation from the concrete. Hot weather limitations commence when the internal temperature of the concrete during placement, exceeds 85°F. If these conditions exist, maintain an internal concrete placement temperature less than 90ºF or submit concrete trial-batch test results for the concrete mix designs conforming to the requirements for production during hot weather conditions. Meet the following requirements:

1. Maintain a minimum internal concrete temperature of 94°F throughout the trial-batching process.

2. After initial mixing, hold the trial batch in the mixer for 90 minutes. During this period, turn the drum intermittently for 30 seconds every five minutes. In between the intermittent turning of the drum, cover the drum opening with an impermeable cover to prevent moisture loss and to maintain heat. At the end of the 90-minute period, remix the trial batch a minimum of one minute and then test for slump and air content.

3. After completion of a 90-minute mixing period, ensure that the trial batch has the desired workability, with slump and air content within the specified range as shown in Table 03901-3. Allow the addition of water if the slump is below the target range but do not exceed the maximum water-to cementitious material ratio. Remix a minimum of two minutes after addition of second water. Furthermore, ensure that concrete temperature is not less than 94°F at any time during the trial batch testing.

4. Remove and replace concrete placed at a temperature exceeding 90ºF that fails to meet the hot weather trial-batch acceptance criteria at no cost to the OWNER. The CONTRACTOR is responsible for proper mixing, placing, and curing of concrete as determined by the ENGINEER. Regardless of any hot weather precaution taken, remove and replace all concrete attaining an internal temperature in excess of 99ºF during placement at no additional cost to the OWNER.

E. **Rain Protection**: Prior to any concreting operations, have available at the jobsite sufficient plastic sheeting material to prevent rainwater from marring or leaving indentations in any fresh concrete. Lap sections of plastic sheeting a minimum of 18 inches and extend coverage beyond edges so that edges are not marred by falling rainwater. Secure plastic sheeting so that it will remain in place to protect the surface. As soon as conditions permit, reapply all curing compound washed away by the rain. Repair all areas of tining or surface finishing marred by rain or plastic sheeting coverage. Repair all rain-damaged areas at no cost to the OWNER.

3.5 MASS CONCRETE

A. Mass concrete is defined as a structural concrete placement having a least dimension of 48 inches or greater, or if designated on the plans or in the project specifications as being mass concrete. Structural Class S concrete is exempt from mass concrete requirements.

B. Submit proposals for the mass concrete mix design, analysis, temperature monitoring, and control, including insulation and methods, to the ENGINEER for review and acceptance a minimum of 30 days prior to the placement of any mass concrete.

C. The structural class designation for mass concrete is Class MASS (A1, A2, or A3) as shown in Table 901-3.

D. Use Type II Portland cement. Replace Portland cement with fly ash at 20 percent to 50 percent by weight or replace with slag cement at 50 percent to 70 percent by weight or a ternary mix meeting specification requirements. Certify that the cementitious combination generates a heat of hydration of not more than 70 calories/gram at 7 days as determined by ASTM C186 or ASTM C1702.

E. Use Type B or D aggregate gradation for mass concrete.

F. Do not use accelerating admixtures in mass concrete.

G. Produce a structure free from thermal cracks. Place mass concrete continuously to eliminate cold joints. Control differential temperatures by appropriate use of insulated forms, curing blankets, or other acceptable methods. If during the first 48 hours after placement, the temperature differential nears 35ºF, take corrective measures immediately to remain within the limits. Furthermore, revise the plan to maintain the limits on differential temperature on any remaining placements of mass concrete. Obtain the ENGINEER's acceptance of the revised plan prior to implementation. Strength gain and cooling of the mass concrete placements can take a long time. Take all such time and strength considerations into account when planning construction activities.

H. Submit an analysis to the ENGINEER of the projected thermal developments within the mass concrete elements for the anticipated concrete and ambient temperatures, along with the proposed mix design and construction methods. Include a copy of model results, with site and element specific data, and any electronic files. Describe the measures and procedures intended to maintain, monitor, and control the temperature differential between the interior and exterior of the mass concrete elements. A maximum

temperature during curing of 160ºF and a maximum differential temperature of 35°F is allowed. An abbreviated submittal may be allowed for previously approved mass concrete mix designs.

I. Provide temperature-monitoring devices to record temperature development between the interior and the exterior of the element at points acceptable to the ENGINEER. Monitor a minimum of two independent sets of interior and exterior points for each element to provide redundancy. Locate the monitoring points at the geometric center of the element for the interior point and two inches from the surface along the shortest line from the geometric center to the nearest surface of the element for the exterior point. Use automatic sensing and recording instruments that record information at a maximum interval of one hour. Calibrate monitoring devices to the manufacture's recommendations. Use devices that operate within the temperature range of 0 to 180ºF with an accuracy of ± 2ºF. Take readings and record the temperature data at intervals no greater than 6 hours to ensure that the automatic devices are working properly and that the temperatures are within allowable limits. The intervals of one and six hours begin immediately after casting is complete and continue until the maximum temperature differential is reached and begins to drop. Transmit these readings to the ENGINEER daily. Prior to the placement of mass concrete, perform a test of the automatic and manual thermal sensing and recording equipment to ensure they are operational.

3.6 ACCEPTANCE CRITERIA

A. Remove and replace concrete not complying with specifications requirement at no additional cost to the OWNER.

	Average Compressive Strength, psi, at 28 Days	Grade of Coarse Aggregate[1]	Surface Resistivity, kΩ-cm)[2]	Maximum Water/Cementitious Material Ratio	Air Content, Percent by Volume[3]	Slump Range, Inches[5]		
						Non – Vibrated[4]	Vibrated	Slip Form Paving[6]
Structural Class								
A1	*4,500*	*57M, 67, 89M[9], B,D*	*22*	*0.45*	*2-7*	*2-5*	*2-4[4]*	*N/A*
A2	*6,500[11]*	*57M, 67, 89M[9], B,D*	*22[11]*	*0.45*	*2-7*	*2-5*	*2-4[4]*	*N/A*
A3	*9,000[11]*	*57M, 67, 89M[9], B,D*	*22[11]*	*0.36*	*2-7*	*2-5*	*2-4[4]*	*N/A*
P1	*6,000[8]*	*57M, 67, 89M[9], B,D*	*22*	*0.44*	*2-7*	*N/A*	*2-6[10]*	*N/A*
P2	*8,500[8]*	*57M, 67, 89M[9], B,D*	*22*	*0.40*	*2-7*	*N/A*	*2-6[10]*	*N/A*
P3	*10,000[8]*	*57M, 67, 89M[9], B,D*	*22*	*0.40*	*2-7*	*N/A*	*2-6[10]*	*N/A*
S	*4,500*	*B, D*	*22*	*0.53*	*2-7*	*6-8*	*N/A*	*N/A*
Mass (A1)	*4,500*	*B, D*	*22*	*0.53*	*2-7*	*N/A*	*2-4[4]*	*N/A*
Mass (A2)	*6,500[11]*	*B, D*	*22[11]*	*0.46*	*2-7*	*N/A*	*2-4[4]*	*N/A*
Mass (A3)	*9,000[11]*	*B, D*	*22[11]*	*0.36*	*2-7*	*N/A*	*2-4[4]*	*N/A*
Minor Structure Class								
M	3,000	57M, 67, *89M[9]*, B, D	---	0.56	2-7	2-5	*2-4[4]*	1-2.5
R	1,800	57M, 67, B, D	---	0.70	2-7	2-5	*2-4[4]*	N/A
Pavement Type								
B	*4,000*	*B, D*	*---*	*0.53*	*2-7*	*N/A*	*2-4*	*1-2.5*
D	*4,000*	*B, D*	*---*	*0.53*	*2-7*	*N/A*	*2-4*	*1-2.5*
E	*4,000*	*57M, 67, 89M[9], B,D*	*---*	*0.40*	*2-7*	*N/A*	*2-4*	*1-2.5*

1. Values shown represent the minimum compressive strengths allowed for all cylinders.
2. Only use grade 89M Coarse Aggregate when specified or permitted by the ENGINEER.
3. No more than 2 – inch slump differecntial for any dsign placement. Allow 8 inch maximum slump if water reducers are used.
4. Average Compressive Strength and Resistivity at 56 days.
5. Dry – cast concrete for concrete pipe is exempt from this table.
6. Use combined aggregate gradation complying with Section 02003 – Aggregates.
7. Value based on 4” x 8” cylinder tested at 28 – days of age.
8. See specifications for air entrainment requirements.
9. 8 inch maximum slump allowed if water reducers are used.
10. Additional slump may be allowed only with approval of the ENGINEER.
11. Also slump range for other concrete placed by extrusion methods.
12. See specifications for allowable cement types.

- END OF SECTION –

APPENDIX A – LDOTD PROJECT PERMIT PROVISIONS

02020127

Three (3) copies of the drawings must accompany this permit application.

When applicable, the following supplement is also required and shall become a part of this permit: Railroad Supplement

ENTERED IN COMPUTER FILE

INITIAL AND DATE

Permit Number _____

CONTROL 283 **SECTION** 09

26-28309-003-23

STATE OF LOUISIANA
DEPARTMENT OF TRANSPORTATION AND DEVELOPMENT

PROJECT PERMIT

(Required by State Law) Rev 2/22

A copy of this permit shall be available at the site where and when work is performed.

Whereas Jefferson Parish Government,
(Print or type name of applicant)

hereinafter termed applicant, requests a permit for the use and occupancy of the right-of-way of State Highway No. US 90 Business

in Jefferson Parish Parish, located as follows:

from: right-of-way of U.S. 90 Bus. (Westbank Expressway) Lat: 29.899433 Long: -90.073413

to: right-of-way of U.S. 90 Bus. (Westbank Expressway) Lat: 29.899468 Long: -90.073345

(in Decimal Degrees, e.g. Lat:-30.459, Long: -91.178)

for the installation, operation, and maintenance of the following described project (use additional sheets as necessary):

construction of a concrete closure to enclose the open area between ends of 12' x 8'H concrete box culvert and 121" x 77"H RCPA (96" Dia. Equiv.). The enclosure will be within the right-of-way of the Westbank Expressway (Eastbound or South Side) as shown on Drwgs.

Estimated number of times this facility will be accessed each year after construction has been completed, including meter readings: 1

By signing this permit, applicant/permittee hereby acknowledges receiving a copy of the permit, the general conditions and standards, and the Standards for Installation of Facilities on State Highways, and agrees to comply with all provisions contained therein and all applicable laws, rules and regulations.

DOTD USE ONLY:
Permit is subject to the following conditions (use additional sheets as necessary):

DOTD Shall be notified one week prior to expected lane closures on US90B.

RECOMMENDED FOR APPROVAL
(Check box if review required)

Danielle Valladares 2/8/23
☒ District Permit Specialist / Date

☒ District Area Engineer / Date

☐ District Water Resources Engineer / Date

☐ District Administrator (or Designee) / Date
Print Name

Applicant must notify District Permit Specialist at phone number: Danielle.Valladares@LA.GOV **prior to beginning work and after work is completed.**
Final inspection and approval by: Nelson Capote

Issue Date: 2/14/23

Installation to be completed by: 8/14/23
(Date)

HEADQUARTERS (original) pc: DISTRICT

Permit must be signed by the owner or lessee of the property.
Contractor may NOT acquire permit

2/7/2023
(Agency Representative Signature) (Date)

Neil Schneider, CCM, P.E.
(Name of Person Signing Permit) (Printed or Typed)

Director, Capital Projects
(Title)

1221 Elmwood Park Blvd., Suite 906
(Street or P.O. Box)

Jefferson LA 70123
(City or Town) (State) (Zip Code)

504-736-6833
(Telephone Number)

nschneider@jeffparish.net
(E-mail Address)

DOTD APPROVAL:

2/10/23
Headquarters Right-of-Way Permit Engineer / Date or
District Administrator (or Designee) / Date

Print Name Scott G. Boyle, P.E. PTOE

pc: PERMITTEE

The following general conditions and standards shall apply:

FIRST: That, the rights and privileges granted herein shall be nonexclusive and shall not be construed to be any broader than those expressly set out in Acts of the Legislature of the State of Louisiana, regardless of the language used in this permit and that any facilities placed on the highway right-of-way shall be placed in accordance with existing laws and the standards of the Department.

SECOND: That, all facilities thereto, after having been erected, shall at all times be subject to inspection and the right is reserved to require such changes, additions, repairs, relocations and removal as may at any time be considered necessary to permit the relocation, reconstruction, widening and maintaining of the highway and to provide proper and safe protection to life and property on or adjacent to the highway, or in the interest of safety to traffic on the highway and that the cost of making such changes, additions, repairs and relocations shall be borne by the applicant, and that all of the cost of the work to be accomplished under this permit shall be borne by the permittee who agrees to hold the Department harmless therefor.

THIRD: That, the proposed facilities or their operation or their maintenance shall not unreasonably interfere with the facilities or the operation or maintenance of the facilities of other persons, firms or corporations previously issued permits of use and occupancy, and the proposed facilities shall not be dangerous to persons or property using or occupying the highway or using facilities constructed under previously granted permits of use and occupancy; and that the Department's records of prior permits are available, it being the duty of the applicant to determine the existence and location of all facilities within the highway right-of-way.

FOURTH: That, installations within the highway right-of-way shall be in accordance with applicable provisions contained in the following: AASHTO Guide for Accommodating Utilities within Highway Right of Way, Code of Federal Regulations 23 (CFR 23), National Electrical Safety Code C2, and the 1996 Federal Telecommunications Act. Those facilities not included in the above mentioned documents shall be in accordance with accepted practice. Where standards of the Department exceed those of the above cited codes, the standards of the Department shall apply, The Department reserves the right to modify its policies as may be required if conditions warrant.

FIFTH: That, data relative to the proposed location, relocation and design of fixtures or appurtenances as may be required by the Department shall be furnished to the Department by the applicant free of cost, and that the permit applicant shall make any and all changes or additions necessary to make the proposed facilities thereto satisfactory to the Department.

SIXTH: That, cutting and trimming of trees, shrubs, etc., shall be in accordance with the Department's EDSM IV.2.1.6 and Vegetation Manual, as revised.

SEVENTH: The applicant shall indemnify and save harmless the Department, its officers, agents, employees, contractors and assigns against any and all costs, expenses, claims, losses, liabilities, demands, suits, causes of action, damages, and judgments of any sums of money to any party accruing against the Department, its officers, agents, employees, contractors and assigns, growing out of, resulting from, or by reason of the presence or operation of the proposed facilities or any act or omission of the applicant, its officers, employees, agents, contractors and assigns while engaged in, about, or in connection with the discharge or performance of the terms of this permit or the operation, maintenance and use of the proposed facilities, whether by the applicant or third parties. Such indemnification shall include, without limitation, attorney's fees, court costs, fines, penalties, legal, consulting, accounting, engineering, and other expenses. The applicant shall provide and bear the expenses of all personal, professional, or other applicable insurance related to its ownership and operation of the proposed facilities and its duties arising under the permit.

EIGHTH: That, the applicant is the owner of the facility for which a permit requested, and is responsible for maintenance of such: and any permit granted by the Department is granted only insofar as the Department had the power and right to grant the same.

NINTH: That, any permit granted by the Department is subject to revocation at any time.

TENTH: That, signing for warning and protection of traffic in instances where workmen, equipment or materials are in close proximity to the roadway surfacing, shall be in accordance with requirements contained in the Department's Manual on Uniform Traffic Control Devices. No vehicles, equipment and/or materials shall operate from, or be parked, stored or stock piled on any highway, median, or in an area extending from the outer edge of the shoulder of the highway on one side to the outer edge of the shoulder of the highway on the opposite side or in the median of any divided highway.

ELEVENTH: That, all provisions and standards contained herein relative to the installation of utilities shall apply to future operation, service and maintenance of utilities.

TWELFTH: That, drainage in highway side and cross ditches must be maintained at all times. The entire highway right-of-way affected by work under a permit must be restored to as good a condition as existed prior to beginning work to the complete satisfaction of the Departments R/W Permit Engineer.

THIRTEENTH: Any non-metallic or non-conductive underground facility must be installed with a non-corrosive metallic wire or tape placed directly over and on the center of the facility for its entire length within highway right-of-way. Wire or tape must be connected to all facilities.

FOURTEENTH: Prior to performing any excavations, the applicant is required to call Louisiana One Call. If installing any underground facilities such as cable or conduits, the applicant must be a member of Louisiana One Call. In addition, the applicant must contact DOTD at DOTD-FiberLocates@la.gov at least 24 hours prior to performing any excavation on DOTD Right-of-way (either for installation or maintenance).

STANDARDS FOR INSTALLATION OF FACILITIES ON STATE HIGHWAYS

GENERAL

(1) All materials and workmanship shall conform to the requirements of the applicable industry code and to Department specifications.

(2) All safety precautions for the protection of the traveling public must be observed. Undue delay to traffic will not be tolerated.

(3) All excavations within the limits of the right-of-way shall be backfilled and tamped in six inch layers to the density of the adjacent undisturbed soil. Where sod is removed or destroyed, it shall be replaced within one week. Where existing spoil material is, at the discretion of the Department, unsuitable for backfill, select material shall be furnished in lieu thereof and the existing material disposed of by approved methods.

(4) Any clearing and grubbing which may be required by the applicant shall be represented by a plan covering any such actions as well as erosion control measures which may be required to vegetate the area under such clearing and grubbing. The applicant is authorized to retain all cleared timber. The applicant shall follow-up with an erosion control, seeding plan approved by DOTD.

(5) Access to the lines shall be first from the land side, second from the interchange (longitudinally) and third from the highway (to be approved in each instance).

(6) Repairs under the roadway will not be allowed if such repairs necessitate open cutting the highway. If a problem occurs with a line crossing, the utility company must install a new crossing. The utility company must bear 100% of the cost.

(7) The DOTD District Permit Office shall be contacted and notified and shall give approval whenever the cable must be accessed, including routine maintenance. For routine maintenance, three (3) days notice shall be given. In emergency situations, as much notice as possible must be given.

(8) Repeater boxes shall be placed as far outside of the right-of-way as possible, unless where otherwise approved by the Department, and in an area that will allow easy access for maintenance.

(9) Parallel installations shall be located on a uniform alignment to the right-of-way line and within six (6) inches of the approved alignment.

Danielle.Valladares@la.gov
Office: (504) 437-3190

02020127

From: Mike D'Angelo [mailto:Mike@hdaviscole.com]
Sent: Thursday, January 19, 2023 10:22 AM
To: Danielle Valladares <Danielle.Valladares@la.gov>
Cc: H. Davis Cole <hdcole@hdaviscole.com>; Hailey Robert <Hailey.Robert@LA.GOV>
Subject: RE: HDC Project No. 2017-09 - Brown Avenue Drainage Improvements (Phase 3) Harvey, LA - LDOTD PERMITTING

Danielle,

Plz. see our below responses:

With the inclusion of the TTC Plans will a lane closure be required or only a sidewalk closure?
Response: It's possible that both 1 lane and the sidewalk would be closed for a short time. The date and duration will be determined when a Construction Contractor is selected. We'll work with all parties to ensure applicable requirements are followed. Traffic Control Plans are included in the Plan Set for this anticipated activity.

Will there be any changes to the existing drainage?
Response: No. This Project doesn't provide for drainage improvements per se. .....it just encloses the open area between the ends of 2 existing drainage structures. Stormwater flows in an existing subsurface drainage system that parallels Brown Avenue, and into the existing subject box culvert that crosses the WB Expressway.

Is the intention for the closed top box to have an inlet on top for the surrounding water to continue to flow to?
Response: The enclosure is designed with removable grating in the top concrete slab. Since the grating will be in a future proposed sidewalk (bike path / multi-use path) to be constructed, it will be set at the elevation of the existing sidewalk that will adjoin the proposed sidewalk. While falling rain can enter the grating, it's not the intention for stormwater to drain to this grate because it will be higher than natural ground. Current site drainage as well as site drainage after this project is completed will drain to the grate (installed on top of existing RCPA) that is part of the subsurface drainage system that parallels Brown Avenue as described above. When the proposed sidewalk is constructed, drainage patterns may change based on the design / alignment of the proposed sidewalk by a different engineering firm.

We'll await comments from your engineering personnel before submitting the Project Permit Form.

Thx!

Michael "Mike" D'Angelo, P.E., P.L.S.
H. Davis Cole & Associates, LLC

Office: 504-836-2020, Ext. 203
Mobile: 985-232-2280
Email: mike@hdaviscole.com

1340 Poydras Street, Suite 1850
New Orleans, LA 70112

www.hdaviscole.com

To: Danielle Valladares <Danielle.Valladares@la.gov>
Subject: RE: HDC Project No. 2017-09 - Brown Avenue Drainage Improvements (Phase 3) Harvey, LA - LDOTD PERMITTING

EXTERNAL EMAIL: Please do not click on links or attachments unless you know the content is safe.

Danielle,

After reviewing the attached right-of-way map and a drawing from another consultant that's working on the future sidewalk to be constructed over the enclosure, I believe the LDOTD right-of-way ends at the face of the existing box culvert. I believe the existing concrete box culvert and concrete wing walls were constructed by LDOTD when the WB Expressway was constructed.

Having stated the above, II believe the proposed permanent enclosure will be within the existing drainage servitude in favor of JP. However, since plans are to remove the existing concrete wing walls and concrete barrier partition as well as connect the proposed structure to the face of the existing concrete box culvert, LDOTD may want to treat the work under a Project Permit.....I'll leave the final decision to you in that regard.

Attached is the Project Permit signed by JP.

Please let me know how you would like to proceed.

Thx!

Michael "Mike" D'Angelo, P.E., P.L.S.
H. Davis Cole & Associates, LLC

Office: 504-836-2020, Ext. 203
Mobile: 985-232-2280
Email: mike@hdaviscole.com

1340 Poydras Street, Suite 1850
New Orleans, LA 70112

www.hdaviscole.com

H. Davis Cole & Associates, LLC
Consulting Engineers

From: Danielle Valladares <Danielle.Valladares@la.gov>
Sent: Tuesday, February 7, 2023 3:25 PM
To: Mike D'Angelo <Mike@hdaviscole.com>
Subject: RE: HDC Project No. 2017-09 - Brown Avenue Drainage Improvements (Phase 3) Harvey, LA - LDOTD PERMITTING

Mike,

Can you or Jefferson Parish confirm the DOTD right of way vs Jefferson Parish Right of Way at this intersection? It appears that the work could be outside of DOTD ROW. If that is the case and no changes are being made to the existing drainage as stated below, then a project permit may not be needed. In that case only a temporary occupancy permit would be needed for the lane and sidewalk closures. Please confirm with Jefferson Parish and return the appropriate permit form.

Danielle Valladares, P.E.
District 02 Construction Coordinator
Permits & Utilities Engineer
Louisiana Dept of Transportation & Development
Danielle.Valladares@la.gov
Office: (504) 437-3190

From: Mike D'Angelo [mailto:Mike@hdaviscole.com]
Sent: Tuesday, February 07, 2023 11:36 AM
To: Danielle Valladares <Danielle.Valladares@la.gov>
Cc: Hailey Robert <Hailey.Robert@LA.GOV>
Subject: RE: HDC Project No. 2017-09 - Brown Avenue Drainage Improvements (Phase 3) Harvey, LA - LDOTD PERMITTING

Please see attached.....thx!

Michael "Mike" D'Angelo, P.E., P.L.S.
H. Davis Cole & Associates, LLC

Office: 504-836-2020, Ext. 203
Mobile: 985-232-2280
Email: mike@hdaviscole.com

1340 Poydras Street, Suite 1850
New Orleans, LA 70112

www.hdaviscole.com

H. Davis Cole & Associates, LLC
Consulting Engineers